UNITED STATES ARMY

AVIATION DIGEST

MAY 1988

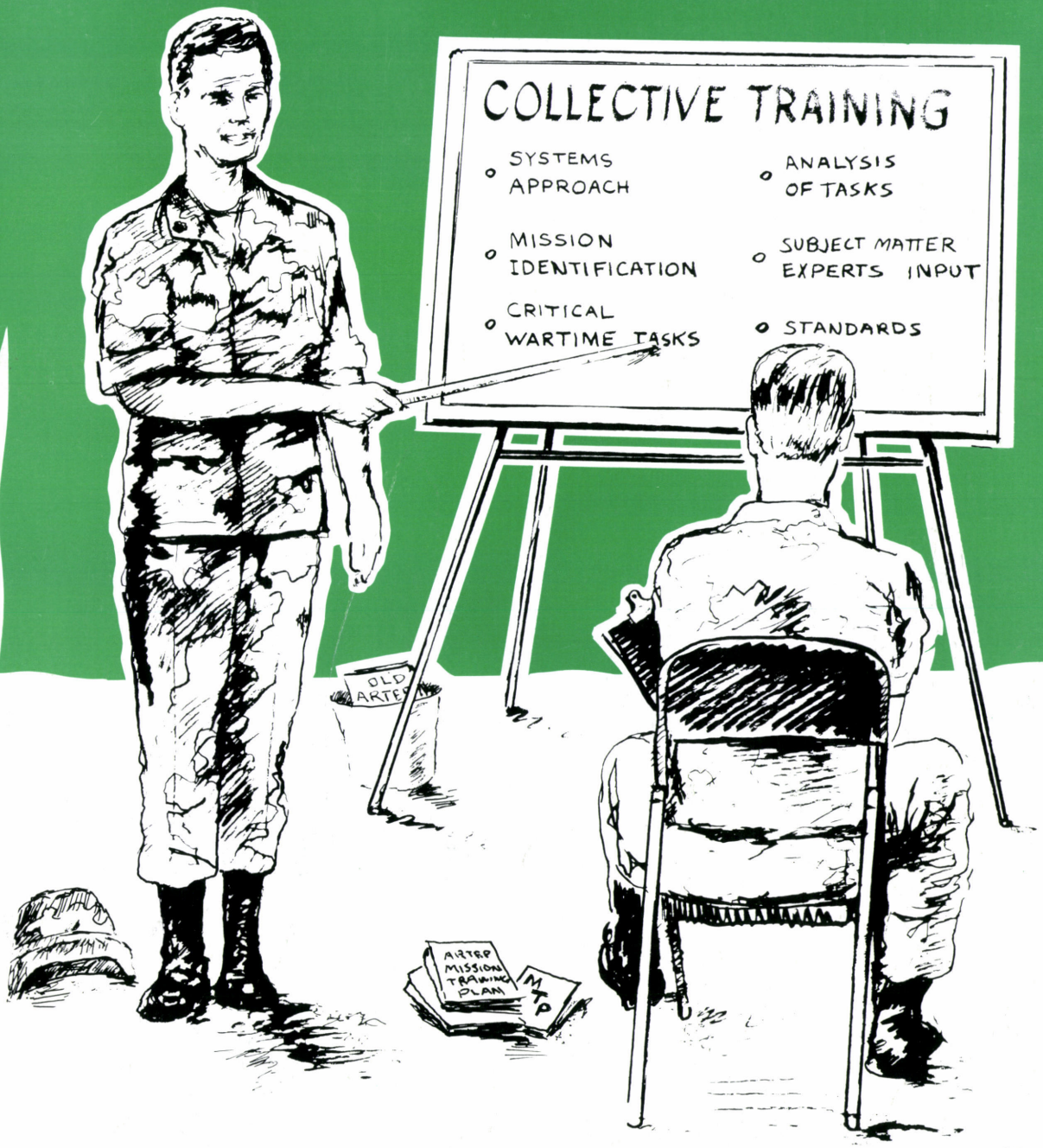

Professional Bulletin 1-88-5

Distribution Restriction: This publication approved for public release. Distribution is unlimited.

PROFESSIONAL BULLETIN

1-88-5 • MAY 1988

1 **Installation Compatible Use Zone Program,** MG Ellis D. Parker
2 **Collective Training Enters A New Phase,** Mr. Curtis Frazier
7 **Aerial Observers—An Integral Part of the Scout Attack Team,** CPT Jeffrey A. Crabb
8 **Aviation Officer Advanced Course,** CPT Wade Johnson
11 **USAASO Sez,** Mr. Dennis Newport
12 **Night Vision Flying Lessons Learned**
14 **PEARL'S**
16 **Joint Combat Airspace Command and Control Course,** MAJ Vernon M. Huggins
18 **AH-64, A Total System for Battle,** Mr. John A. Moore and Mr. Wendell W. Shivers
31 **DES Report to the Field: Aircraft Armament—Everybody's Business,** CW3 Phillip W. Malone
32 **Aviation Personnel Notes: Temporary Flying Duty Clearances; Shortages of NCO Logistics Program Soldiers in Career Management Field 67**
34 **Focus on Training,** CPT Randall N. Briggs
36 **Flight Engineer Instructors for CH-47s,** MAJ Gary T. Greening
38 **Views From Readers**
40 **Threat: Who's in That Other Cockpit? The Soviet Helicopter Pilot,** CPT Johnnie A. Ham
44 **What!? I'm Not Going to be Flying!?,** MAJ Jeffrey R. Murray

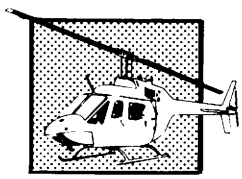

page 7

page 8

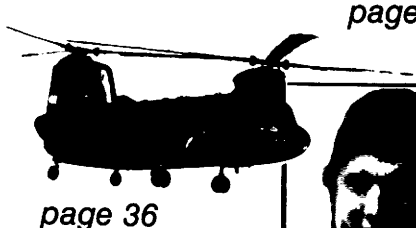

page 36

page 40

Outside Back Cover: **ATC Focus: The Air Traffic Control Awards Program, MSG Paul J. Duale**

Cover: **The Army's new ARTEP Mission Training Plan (AMTP) is revolutionizing the aviator's approach to training. This month's lead article, "Collective Training Enters A New Phase," begins on page 2.**

Major General Ellis D. Parker
Commander
U.S. Army Aviation Center

Patricia S. Kitchell
Editor

By order of the Secretary of the Army:
Carl E. Vuono
General, U.S. Army
Chief of Staff

Official:
R. L. Dilworth
Brigadier General, U.S. Army
The Adjutant General

The mission of the *U.S. Army Aviation Digest* professional bulletin (USPS 415-350) is to provide information of an operational, functional nature concerning safety and aircraft accident prevention, air traffic control, training and doctrine, maintenance, operations, research and development, aviation medicine and other related data. Information contained in this bulletin does not change or supersede any information presented in other official Army publications.

The *Digest* is an official Department of the Army professional bulletin published monthly under the supervision of the commander, U.S. Army Aviation Center. Views expressed herein are not necessarily those of the Department of the Army nor the U.S. Army Aviation Center. Photos are U.S. Army unless otherwise specified. Use of the masculine pronoun is intended to include both genders unless otherwise stated. Material may be reprinted provided credit is given to the *Aviation Digest* and to the author unless otherwise indicated

Articles, photos and items of interest on Army Aviation are invited Direct communication is authorized by writing Editor, *U S. Army Aviation Digest,* P.O. Box 699, Fort Rucker, AL 36362-5042, or by calling either AUTOVON 558-3178 or Commercial 205-255-3178. Manuscripts returned only upon request.

Second class postage paid at Daleville, AL, and additional mailing offices.

Active Army units receive distribution under the pinpoint distribution system as outlined in AR 310-2. Complete DA Form 12-5-R and send directly to CDR, AG Publications Center, 2800 Eastern Boulevard, Baltimore, MD 21220. For any change in distribution requirements, initiate revised DA Form 12-5-R.

National Guard and Army Reserve units under pinpoint distribution should submit DA Form 12-5-R. Other National Guard units submit requests through their state adjutant general.

Those not eligible for official distribution or who desire personal copies of the *Digest* can order the magazine from the Superintendent of Documents, U.S. Government Printing Office, Washington, DC 20402

POSTMASTER: Send address changes to Superintendent of Documents, U.S. Government Printing Office, Washington, D.C. 20402. ISSN 0004-2471.

Major General Ellis D. Parker
Chief, Army Aviation Branch

Installation Compatible Use Zone Program

In President Jimmy Carter's Environmental Message to Congress in August 1979, he announced a new Urban Noise Initiative plan to address the problem of urban noise. As a result, the Federal Interagency Committee on Urban Noise was established to encourage the development of noise sensitive programs. The Department of the Army's response to the Urban Noise Initiative plan is twofold: the Installation Compatible Use Zone (ICUZ) program and the Fly Neighborly program.

Each military service branch has an ICUZ program in which noise exposure at the installation level is investigated, described and studied. The ICUZ study results at each installation are available to the public and all levels of government agencies. An ICUZ analysis covers noise contours, accident potential zones, land use compatibilities and incompatibilities; and the planning and/or control of land use are recommended. Department of Defense ICUZ policy requires that—

- All reasonable, economical and practical measures are taken to reduce and/or control the generation of noise from flying.
- Installations and neighboring civilian communities work toward compatible land use planning and control in the local community.
- Installations work with local governments, local planning commissions, special purpose districts and federal government agencies.
- Installations provide technical assistance to local and government agencies to assist them in developing their land use planning, to explain ICUZ and its implications and to work toward compatible planning and development in the vicinity of military airfields.

The Army's Fly Neighborly program is a less regimented, but equally important, adjunct to the ICUZ program. Simply stated, the program addresses the Army's policy of assuming responsibility for the noise the Army produces and then works, through mitigation, to minimize that impact on the local populace. Major tenets of both programs require the individual aviator to take prudent steps to reduce the negative impact of noise imposed on the community.

Here at the Aviation Center, we are actively involved in both the ICUZ and Fly Neighborly programs. Our local airspace has the highest cellular density of air traffic in the free world; consequently, noise abatement is a preventive measure that makes good sense.

Overall, it is important to remember that the machines and firing systems we operate produce noise. How people react to noise depends upon many complex physical, economic and psychological factors. One thing is certain, however, they will react strongly, adversely and actively if the sound is perceived as too irritating or too threatening. We at the Aviation Center recognize it is not up to operators to educate the public about the safety and usefulness of the helicopter; however, pilots can make the public less hostile to their aircraft by making the sound as benevolent as possible.

Fly Neighborly!

Collective Training Enters a New Phase

THE BLADES OF the observation helicopter kicked up a cloud of dust as the helicopter landed at the field site. As Captain Newby rushed from the helipad, Sergeant First Class West greeted him, "What can I do for you, sir?" he asked.

CPT Newby, dressed in full field gear, brushed dust from his face with his left hand and clutched the unit's Army Training and Evaluation Program (ARTEP) manual in his right hand. He answered with enthusiasm, "I'm here to see the battalion commander. Where can I find him?"

"Better than that, sir, I will take you to him," answered SFC West. He escorted CPT Newby to the tactical operations center (TOC). The TOC, a general purpose medium tent, was a beehive of activity. Noncommissioned officers and officers were updating maps, talking on radios and setting up equipment. In the rear of the tent stood a tall, slim man with a pencil and pad in his hand. He moved toward CPT Newby, who immediately snapped to attention.

Lieutenant Colonel Wise, extending his hand, greeted CPT Newby with a smile. As they shook hands, he spoke, "Wait here a minute, Captain, and I will show you around."

As CPT Newby waited, he relaxed and overheard the radio transmission, "Alpha zero six, this is Zulu zero six, over!" The words caught his attention. He walked over to the radio operator and noticed that he looked at his pad and checked off A company. He asked, "How's A company doing?" The radio operator looked at CPT Newby suspiciously. CPT Newby immediately identified himself, "I'm CPT Newby, I'll be taking command of A company."

The operator smiled and replied, "OK, sir."

LTC Wise called CPT Newby and motioned for him to come to the rear of the tent where a group of officers were gathered. LTC Wise introduced him to the officers and then dismissed the group.

LTC Wise instructed CPT Newby to be seated. CPT Newby sat on the edge of his chair and listened attentively as LTC Wise began. "Glad to see you, Captain. I can see that you are ready to get started."

"Yes, sir," replied CPT Newby, holding up a well-worn copy of the unit's ARTEP manual. "I'm anxious to get to my unit. I've been studying this ARTEP manual, and I'm going to do everything possible to help A com-

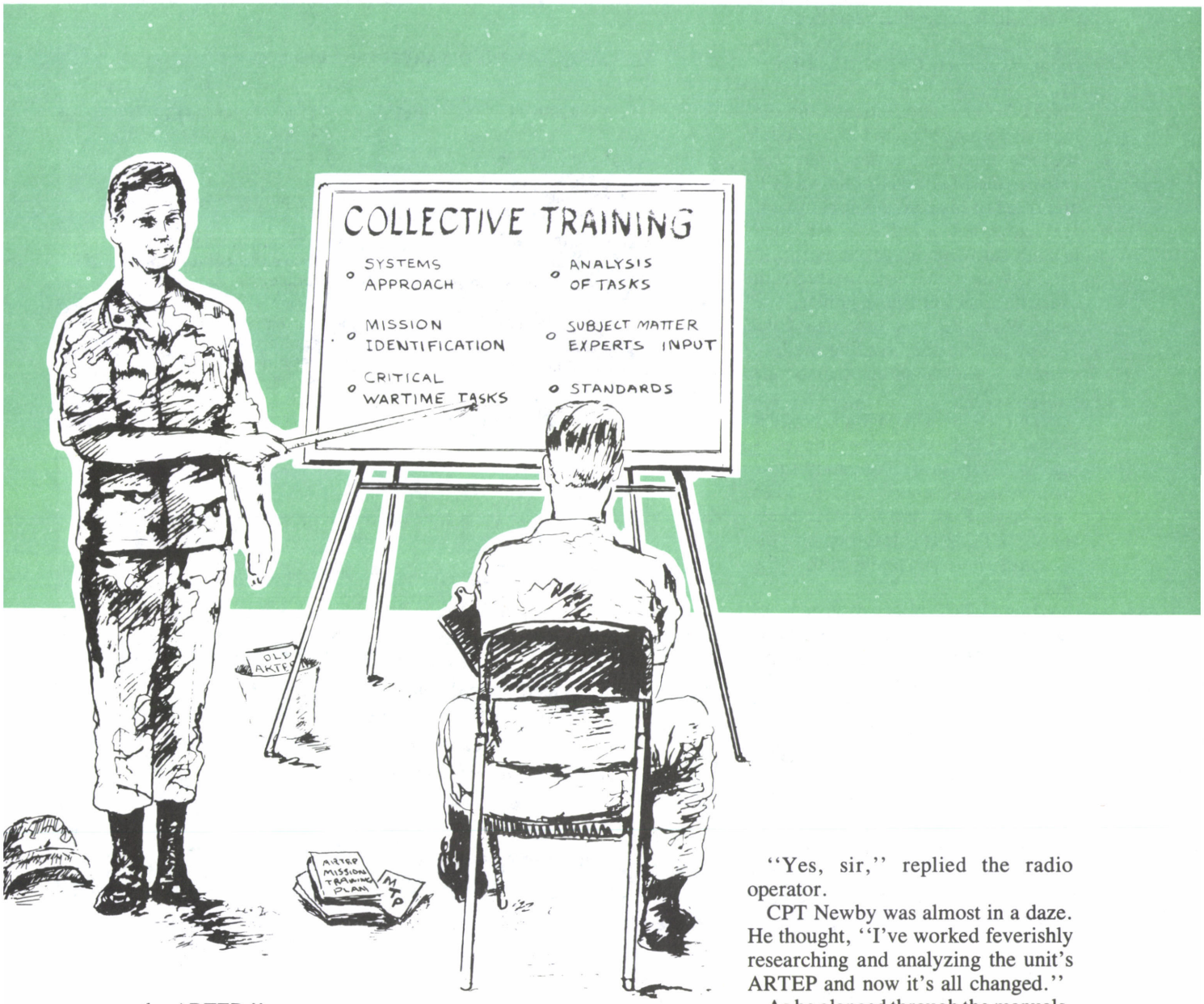

pany pass the ARTEP."

LTC Wise was slightly amused, but his face also expressed concern. Without uttering a word, he walked to a file cabinet and returned with two documents. He gave them to CPT Newby and explained, "These are AMTPs, which means ARTEP Mission Training Plans.* This one is for the company and this one is for the battalion." CPT Newby sat back in his chair with a puzzled look on his face. In less than 30 minutes, his enthusiasm and confidence had turned into confusion. LTC Wise continued, "With these documents, I can train my companies or the battalion at any given time without expending excessive resources. You see, Captain, collective training has entered into a new phase." He turned to the radio operator and said, "Have Sergeant West bring me my old briefing charts."

"Yes, sir," replied the radio operator.

CPT Newby was almost in a daze. He thought, "I've worked feverishly researching and analyzing the unit's ARTEP and now it's all changed."

As he glanced through the manuals, he heard LTC Wise say with compassion, "By the look on your face, you're confused. Relax, the charts I've sent for will help you."

SFC West came into the tent carrying two charts. He placed them on the A-frame stand and explained, "Sir, these are the charts that we brought to the field; I have copies of the others at my desk."

LTC Wise instructed, "Prepare a package for CPT Newby to take to his

*(See Major General Ellis D. Parker's comments on this subject on page 1, *Aviation Digest*, December 1987.)

unit when he leaves." He turned toward his briefing board and began to explain the evolution of the Army training system to CPT Newby (figure 1).

CPT Newby's eyes focused on the mission training plan (MTP). He could see the similarities and the differences between the MTP and the old ARTEP and some of his confidence returned. He expressed relief, "I see they haven't thrown out everything!"

LTC Wise stood back, pleased with himself. "They are quite similar," he said. When he was sure that CPT Newby had finished reading the first chart, he placed the second chart beside it (figure 2).

"You see, even though the concept is new, the MTP does not hinder training. It enhances it. You study these charts while I get a cup of coffee. When I get back, I will answer your questions." LTC Wise picked up his coffee cup and walked to the front of the tent.

When LTC Wise returned 10 minutes later, CPT Newby was looking at the first chart thoughtfully and asked, "Both charts seems to have the same steps in different places. Just what are the specific differences?"

LTC Wise thought for a minute, then answered, "Under the old ARTEP, the standards were too general. This resulted in wide variations of interpretation. The training and evaluation outlines lacked detail and needed a road map to guide trainers and training managers in the 'how to,' in addition to the 'what to,' of collective training at each organizational level."

CPT Newby presented a list of questions that he'd prepared. "Sir," he asked, "how much time should I expect to spend training my troops for each mission?"

"There isn't any fixed time. The actual time you will need depends upon the difficulty of the task, the level of proficiency of your company, and the amount of time and resources you have for training."

CPT Newby was glad there was no time limitation and asked his next question, "This program seems to jump right into collective training. Don't I have to lay a foundation by training individual tasks first?"

"The only foundation you need is to train the individual tasks that are in the collective task you're training."

"But doesn't that mean that my soldiers may not learn all the tasks in the soldier's manual?"

"No," replied LTC Wise, "it just means that they won't learn them all at once. With this program, you train the tasks needed for the mission, then reinforce these tasks by using them to execute higher level collective tasks and missions. It's a more efficient way to train."

Ideas began to form in CPT Newby's head, and he sat up in his chair. His enthusiasm rose, "I've read that I can get credit for training. What does that mean?"

"It means that training accomplished in one mission can carry over into other

The Old ARTEP Characteristics

- Diagnostic
- Multiechelon
- Cyclic
- Repetitive
- Builds on strengths
- Identifies and corrects weaknesses
- Events oriented
- "Soft" standards
- Waste of resources
- No training program
- Units may or may not be required to demonstrate proficiency
- It permits much variation in techniques and procedures

The Current Mission Training Plan Characteristics

- Provides structured but flexible training program
- Retains diagnostic approach
- Provides discretional proficiency test
- Offers precise standards
- Standardizes key techniques and procedures
- Orients on essential missions
- Uses resources efficiently
- Provides training package for each echelon
- Has leader training
- Emphasizes sustainment
- Is "user friendly"

FIGURE 1

echelon	old ARTEP	Mission Training Plan
	battalion company platoon squad	battalion MTP
		company MTP
		platoon MTP

FIGURE 2

missions. Once you have trained your men to execute a task to its standard, you don't have to train it again unless it's been a long time since the previous execution of that task or a performance shortcoming has been detected. In other words, the system 'gives credit' for training already accomplished and avoids unnecessary duplication of training. There are several other things that you have to consider, such as troop turnover and loss of key leaders, but if a task isn't executed to standard, retrain it, regardless of when your troops were last trained."

"Does this mean that I don't have to train all the tasks that appear in a given mission?"

"You've got it!" LTC Wise tapped his pencil on the desk, "If you've trained or executed a task recently and your troops can do the task, then there's no need to retrain that task. But remember, as you monitor and evaluate training, you may modify the training to meet your specific training needs. For example, if you know that you can accomplish a specific task, recommend that training emphasis be placed on some other task in which you are weaker. In other words, you recommend modifications to the program based on your situation. This program is only 80 percent of the solution to the tactical training problem. You have to provide the other 20 percent."

With his confidence and enthusiasm restored, CPT Newby asked excitedly, "In a nutshell, what do I have to do to make the program work?"

LTC Wise concluded, "Do three things. First, plan and supervise current training. Ensure that the training activities for which you are responsible are being carried out as they should be. Second, plan your future training based on the next critical wartime mission and coordinate the resources you will need. Third, evaluate as you go, modifying your training activities to take advantage of strengths and correct weaknesses."

As LTC Wise finished briefing CPT Newby, he saw SFC West coming to the back of the tent with a large manila envelope. "This is the package I prepared for CPT Newby, sir," he said.

LTC Wise gave the envelope to CPT Newby. "These documents should help you establish a good training program, Captain. I am looking forward to visiting your unit soon."

SFC West said, "Pardon me for interrupting sir, but if CPT Newby hurries, he can get a ride on a helicopter that will drop him off at his company's field site."

LTC Wise and CPT Newby shook hands, then CPT Newby departed the TOC. He left with a new understanding of collective training. The old, crumpled unit ARTEP was left on the floor half covered with dust.

About the Author

Mr. Curtis Frazier is an education specialist in the Individual and Unit Training Division, Directorate of Training and Doctrine, Ft. Rucker, AL. He earned a bachelor of arts degree from Miles College, Birmingham, AL, and a master of science degree in education from Troy State University, Troy, AL. He has 35 hours of postgraduate work at Auburn University, Auburn, AL, in vocational education. He is a retired Army air traffic controller and has earned the senior and master instructor ratings at Ft. Rucker.

Army Mission Training Plan Development

The U.S. Army Aviation Center reviewed all proponent tables of organization and equipment (TOE) and doctrinal manuals. This review resulted in the identification and scheduling of 24 ARTEP mission training plans (AMTPs) for development. The Aviation Center production schedule that complies with TRADOC priorities and supports unit needs reflects that fielding of the AMTPs started in first quarter, fiscal year 1988. The Aviation Center will complete the fielding of proponent AMTPs first quarter, fiscal year 1994. AMTPs will be revised based on feedback from field units, changes in the unit's TOE or guidance received from higher headquarters. The normal revision cycle for the Aviation Center to print AMTP products is 2 years.

U.S. Army Aviation Center AMTP Proposed Production Schedule

PRODUCT	TITLE	FIELDING DATE
1. ARTEP 01-227-10-MTP	Air Traffic Control Platoon	88/1
2. ARTEP 01-187-30-MTP	Attack Helicopter Company	88/3
3. ARTEP 01-108-30-MTP	Air Cavalry Troop	88/3
4. ARTEP 01-103-30-MTP	Assault Helicopter Company	89/3
5. ARTEP 01-247-30-MTP	Medium Helicopter Company	89/4
6. ARTEP 01-227-DRILLS	Air Traffic Control Platoon	90/1
7. ARTEP 01-100-MTP	Aviation Command and Staff	90/3
8. ARTEP 01-247-10-MTP	Medium Helicopter Platoon	90/3
9. ARTEP 01-072-10-MTP	Class III/V Platoon	90/4
10. ARTEP 01-102-10-MTP	Communications Platoon	91/1
11. ARTEP 01-186-10-MTP	Aviation Unit Maintenance Platoon	91/2
12. ARTEP 01-266-10-MTP	Assault Helicopter Platoon	91/2
13. ARTEP 01-738-10-MTP	Support Platoon	91/4
14. ARTEP 01-072-20-MTP	Command, Control and Communication Observation Platoon	92/1
15. ARTEP 01-225-10-MTP	Headquarters and Headquarters Detachment Air Traffic Control Battalion	92/1
16. ARTEP 01-316-10-MTP	Combat Electronic Warfare Intelligence Platoon	92/2
17. ARTEP 01-216-10-MTP	Pathfinder	92/3
18. ARTEP 01-702-10-MTP	Medical Platoon	92/4
19. ARTEP 01-217-30-MTP	Command Aviation Company	93/1
20. ARTEP 01-316-20-MTP	Command Aviation Platoon	93/2
21. ARTEP 01-419-30-MTP	Target Acquisition Reconnaissance Company	93/2
22. ARTEP 01-607-30-MTP	Theater Aviation Company	93/3
23. ARTEP 01-606-30-MTP	Headquarters and Headquarters Company Theater Aviation Company	93/4
24. ARTEP 01-416-10-MTP	Fixed Wing Platoon	94/1

AERIAL OBSERVERS

An Integral Part of the Scout Attack Team

Captain Jeffrey A. Crabb

Captain Crabb was assigned to 1st Aviation Brigade, 1/13th Aviation Regiment, U.S. Army Aviation Center, Fort Rucker, AL, when he wrote this article.

AERIAL OBSERVERS (AOs) are certainly not new to Army Aviation, but the training programs and tactics being used are new. The AO gets to a unit with about 330 academic hours and about 67 flight hours and is night visual goggles (NVG) qualified. He is very competent and knowledgeable in his military occupational specialty 93B, but still lacks some of the essential elements that ensure mission completion. These elements include experience, cockpit teamwork and tactics that effectively integrate the OH-58C Kiowa and AH-64 Apache.

I participated in one of the aerial observer tests (Scout II) conducted at Ft. Hunter-Liggett, CA, in 1984. Now having them in an aeroscout platoon, there is no doubt that AOs are an integral part of the scout/attack team.

Training for the AO really begins when he arrives at his new unit. He receives an initial evaluation ride to determine his current level of proficiency. Then he is scheduled training flights until he progresses from readiness level (RL) 3 to RL 1. At this point the AO is ready to begin troop and squadron level training. Let me emphasize that it's really up to the platoon leader and the instructor pilot (IP) to decide how proficient the new AO will be.

Some weaknesses that I saw were with AOs assisting in navigational aid (NAVAID) approaches. The AO should understand NAVAID frequencies, minimum altitudes, decision height, procedure turn information and missed approach point procedures. An excellent way to initially train NAVAID publications and procedures is in the synthetic flight training system. It allows the AO and the pilot to make mistakes and build confidence in one another at the same time. The best way to build this confidence and trust is crew integrity. By keeping the same crews together, they perform better and they know what to expect from one another.

Accurate navigation is probably the most important function an AO performs in the cockpit. He must be able to navigate before any other aeroscout mission can be accomplished.

Another important training aspect is NVG. The 1st Squadron, 6th Cavalry, conducts more than 50 percent of its missions at night using the aviator night vision system—ANVIS 6. It is important that AOs receive hands-on training with an IP not only in day, but at night. AOs must be able to recover an aircraft from a disabled pilot, in combat, and fly to a rear area, regardless of time of day or flight condition.

Let me add that sustainment training is just as important as the initial training phase. To maintain that proficiency AOs must be challenged continuously, should perform in the aviator environment and not serve as "crewchiefs that fly." Observers should be able to perform preventive maintenance dailys, but their primary job is to develop proficiency in combat operations, not in aircraft maintenance.

Developing and implementing an AO training program is not an easy task. But without a plan, the end product will be determined only by what is put into it.

What happens with the aerial observer program in the future is unknown. But in the meantime, the AOs in C Troop, 1st Squadron, 6th Cavalry, are ready to meet the challenges that lie ahead.

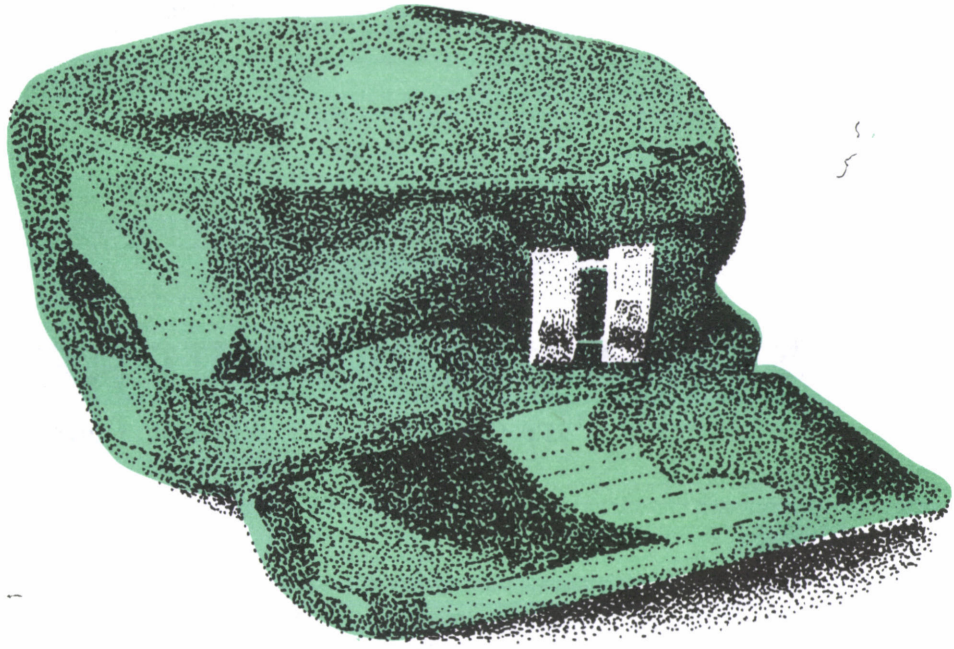

illustration by Paul Fretts

Aviation Officer Advanced Course

Captain Wade Johnson
Task Force 4
1st Aviation Brigade (Air Assault)
U.S. Army Aviation Center
Fort Rucker, AL

SO, YOU HAVE orders to the Aviation Officer Advanced Course (AVOAC). Heh! I bet you envision yourself spending afternoons on the golf course improving your handicap and long weekends on the sunny beaches of Florida or frolicking with Mickey and Donald at Disney World during the holidays.

Well, think again, Captain.

Enter small group instruction (SGI). What? You say you never heard of such an animal! No, it is not a new system on the light helicopter experimental. It is the new U.S. Army Training and Doctrine Command training model designed to provide a better quality environment to enable the student to become more involved in the instruction. The model uses the mentor/facilitator concept instead of the platform one-to-many as the teaching tool.

General

The AVOAC is a 20-week, 100-training-day professional development course for captains designed to produce competent, combined arms, warfighting officers to

perform as aviation company commanders and battalion/brigade staff officers. Major General Ellis D. Parker, commander, U.S. Army Aviation Center, Ft. Rucker, AL, directed the implementation of SGI at Ft. Rucker on 12 May 1987 with AVOAC 87-4. It represents a revolutionary change in the way the Aviation Branch teaches its captains. Instead of the one-to-many format, the learning process is being facilitated in small groups (1 team leader for 12 to 16 students). All service schools are implementing SGI in their officer advanced course (OAC) with Ft. Rucker moving ahead at top speed.

Command and Control

The AVOAC is organized under Task Force 4, 1st Battalion, 13th Aviation Regiment, 1st Aviation Brigade (Air Assault), into two student companies, each commanded by a senior major who has previously been in a command position. Each company has nine captain team leaders who are responsible for about 60 percent of the course program of instruction. The selection criteria for the team leaders are senior captain, successful company command, advanced course and combined arms and services staff school graduate and a previous overseas assignment.

The team leader and the student officer are assigned to the same command organization to foster the team-building process while ensuring academic excellence. The team leader is concerned with total development of the student officer and provides direct input for the student academic evaluation report (AER). This reinforces the leaders-as-mentors philosophy and eliminates the faculty advisor program.

FIGURE 1: Primary blocks of instruction.

BLOCK	LENGTH
Leadership	2 weeks
Doctrinal base	4 weeks
Tactical thought process	5 weeks
Ground maintenance	1 week
Aviation operations	4 weeks
Combined arms operations (reinforced throughout)	2 weeks
Staff ride	1 week
Aviation unit management	1 week

Academics

The AVOAC is broken into eight primary blocks of instruction as shown in figure 1. There are 5 examinations under SGI as opposed to 22 under the old design. No white briefcases are given out to top students. All students compete against a 90 percent set standard. An officer will receive "exceeded course standards" on his AER if 90 percent is achieved in academics and communicative skills and on the Army physical fitness test. The standard is designed to encourage cooperation and the sharing of all information that will benefit the whole class as well as the officer's gaining unit when he departs Ft. Rucker (figure 2, page 10).

The course exposes the student to current events in aviation and the U.S. Army. Guest presentations are given by Task Force 160th, the U.S. Army Space Agency, Army Engineering Test Pilot Program, Total Army Personnel Agency and the Directorate of Aviation Proponency. Every colonel on Ft. Rucker spends time in the AVOAC classroom sharing his expertise in a certain area from promotion boards to assignments as part of the students' officer professional development program.

An exchange program for 4 days with the Infantry Officer Advanced Course at Ft. Benning, GA, has been proposed to be conducted toward the end of the course during battle simulation. The exchange officers will provide input and perform as liaison officers from adjacent and higher headquarters.

Physical Training

Everyone will be placed on an athletic scholarship for 20 weeks. Physical and mental conditioning is a top priority at the AVOAC. Physical fitness allows soldiers to function effectively in physical and mental work, training and recreation, and still have energy to handle emergencies.

Our program was developed around the five components of physical fitness, which are as follows:

- Cardiorespiratory endurance
- Muscular strength
- Muscular endurance
- Flexibility
- Body composition

Physical training is conducted at least four times a week and is performed in small groups under control of the SGI team leader. Three days are dedicated to the five components of physical fitness concentrating on cardiorespiratory endurance, muscular strength, muscular endurance and flexibility.

The other days are used for team sports, battalion/brigade fun runs, 5- or 8-mile forced marches or negotiating the Air Assault School obstacle course. These activities are used to develop small group cohesion and to test the individual's total fitness.

Communicative Skills

To be a successful commander or staff officer, the officer must be able to communicate effectively through written and oral means. Students are constantly giving briefings or presentations during class. This enables them to develop the skills and knowledge required to perform in their next unit.

A major emphasis is placed upon being able to write effectively. Everyone must take and pass an English comprehensive examination. Those who do not meet the standards will take 20 hours of refresher training and retake the examination.

Besides writing numerous operations orders, operations plans and estimates, every student will write a summary, information paper, disposition form, staff study and an article for publication. These documents will reinforce the students' ability to communicate their intentions in writing.

Conclusion

The AVOAC is a tough and demanding course that produces a highly qualified combined arms officer who will perform above standards in his next unit. Students teach themselves with the SGI team leader to provide direction when required. The ultimate goal is to teach "how to think" as opposed to "what to think."

We have raised our standards! Can you meet them? "SOLDIER ON!"

FIGURE 2: Course highlights.

Tactical thought:	**Staff estimate process, orders preparation and briefing.**
Aviation operations:	**Integrated practical exercises that include cavalry, attack, assault and brigade operations (tactics, maintenance and logistics).**
Field training exercise:	**Includes common task testing, land navigation, night operations and pistol qualification.**
First battle:	**Total combined arms operations: Students prepare, brief and execute both ground and aviation units in a command post exercise.**
Staff ride:	**As the course capstone, integrates leadership, principles of war, tactics and lessons learned during a 2-day study at the Battle of Chickamauga, GA (19 and 20 Sep 1863).**
Total fitness:	**Train-the-trainer doctrine; total fitness education and individual training program.**

USAASO SEZ

Mr. Dennis Newport
U.S. Aeronautical Services Office
Cameron Station, Alexandria, VA

HOW MANY OF YOU remember the heading above? If you have been around Army Aviation for more than 12 years, you will recognize it as the title for the monthly articles submitted by the U.S. Army Aeronautical Services Office (USAASO). In August 1976, the name of the column was changed from USAASO SEZ to ATC Action Line to relate more closely to the scope and objectives of the U.S. Army Air Traffic Control Activity (USAATCA).

The USAATCA has moved to Ft. Rucker, AL, and is officially a member of Army Aviation. To report air traffic control (ATC) items of interest, USAATCA is now publishing a column entitled ATC Focus. USAASO will once again publish this column to provide information on flight information publications, aeronautical charts, new or revised rules and regulations, pilot procedures and other related operational matters.

What is the history of the USAASO? In 1954, the chief signal officer assumed responsibility for collecting, evaluating and disseminating all flight information for the Army and the National Guard within the continental United States. The U.S. Army Aviation Flight Information Office was established and began issuing TM 11-2357, "Airwar Manual," published by Jeppesen and Company, to each aviator. By January 1957, flight information detachments had been established in Japan, Germany and Panama, giving the office worldwide responsibility for providing flight information to Army Aviation elements.

In early 1964, it was determined that Army Aviation interests could be served better if the flight information office was placed under the Director of Army Aviation, Assistant Chief of Staff for Force Development. This move added additional functions and the office became the Department of the Army executive agency on airspace, air traffic regulations, rules, procedures, related ground support facilities and systems, and aeronautical information. In September 1967, the reorganization was completed and the office was renamed the U.S. Army Aeronautical Services Office.

In 1973, USAATCA was formed under the U.S. Army Communications Command to centralize control of ATC personnel and equipment assets. The USAASO became part of USAATCA, retaining the functions to represent the Army on airspace, instrument procedures and aeronautical information at the national level.

The USAASO has been supporting Army Aviation for more than 30 years. We will continue to be your source of brief, pertinent items on aeronautical services that support your flight missions.

We also publish the Flight Information Bulletin Technical Aviation X-XXXX each month to provide additional information regarding up-to-minute, aviation-related issues. Many articles that have appeared in this column were based on inquiries, comments and constructive criticism from field aviation units. We solicit your questions, ideas and constructive criticism. Write us an informal letter or send us a comment card (DA Form 3588) to: Director, U.S. Army Aeronautical Services Office, Cameron Station, Alexandria, VA 22304-5050.

USAASO invites your questions and comments and may be contacted at AUTOVON 284-7773.

Night Vision Flying Lessons Learned

WITH THE SUMMER months comes an increase in flying hours, field training exercises and exposure to risk. Many hours will be flown in the high-risk, night tactical environment with night vision devices (NVD).

Analysis shows that most NVD accidents from fiscal year 1984 to the present have been caused by spatial disorientation, flying too fast based on the visual cues and conditions present, wire strikes or failure to see other aircraft.

Some lessons learned from a study of NVD accidents include the following:

• Adjustment of the NVD is critical. If the tubes are not adjusted properly to match the "spread" of a crewmember's eyes, optimum visual acuity and depth perception will be affected.

• Well-defined procedures must be developed and followed before operating with PVS-5-, ANVIS- and pilot night vision sensor-equipped aircraft and crews in the same training area. Each has different capabilities and limitations that must be considered.

• NVD routes and operational procedures must be validated for adequacy. Checkpoints are often "choke" points. Ensure procedures clearly define where aircraft are to be and the required communication. Ensure everyone who uses the area know the procedures and that non-NVD-equipped aircraft stay out. Always plan and develop NVD areas and procedures based on the local conditions and environment. What worked at the last place will not necessarily work at the next place.

• In most NVD-related accidents, the crew sensed or knew that everything was not right just before the accident occurred. The crew, or at least one member of the crew, was uncomfortable but, for some reason, did not let this be known or thought the other crewmembers had everything under control. Communicate as a crew. If any member of the crew is uncomfortable, these feelings should be made known. Get out of the area, regroup and try again if appropriate. If crews are unsure how close obstacles are or how close other aircraft are, they should assume they are too close and clearance is inadequate. Take corrective action.

• Most wires cannot be "seen" with NVDs. When aircraft suffered wire strikes, crews were unsure or did not know the exact location of the wires.

• Low-ambient light conditions create a high signal or noise ratio, or graininess in the goggles. The definition of objects viewed by the pilot loses sharpness or contrast. This results in inability to see some obstacles, depending on the backdrop of that object. This characteristic is still present in newer generations of NVDs, although greatly improved. NVD flights under overcast conditions away from populated areas have resulted in accidents because of this phenomenon.

• Visual contrast is the most critical factor during NVD flight. Contrast matters little if altitude permits obstruction clearance and flight instruments are available to prevent disorientation. However, flights into, out of or around areas of minimal contrast are hazardous. Proper visual scan techniques will aid, although in some situations they cannot prevent, spatial disorientation. Areas void of visual cues require a combination of internal and external viewing for orientation purposes. Highly skilled and properly trained crews with artificial lighting and the latest generation NVDs can still become confused without

adequate visual cues to relate movement.

• The 40-degree field of view tends to promote disorientation through tunneled vision. However, with proper visual cues, orientation can be maintained. Viewing outside references through the tubes is the only method for accomplishing most rotary wing tasks. If available, radar altimeters aid in determining altitude but can be unreliable, depending on aircraft attitude and terrain below. Stationary visual cues or breaks of contrast provide the only reliable information. Sometimes it's as simple as having ground crews walk around in the snow, providing contrast through footprints. At other times, a low approach and dropping a few chemlights to provide a landing area will help. Seeking areas of contrast is a must during approach or hover work. Excessive hover height can also induce disorientation. Distant visual cues make it difficult to detect direction and rate of movement.

• Ceiling and visibility are not the primary factors in determining satisfactory conditions for NVD operations. Available ambient light, restrictions to visibility and discernible contrast are the primary factors for safely employing NVDs.

• Rolling, featureless desert or sand dunes provide hazardous NVD conditions requiring instrument light.

• The urgency of certain emergencies while flying aided or unaided requires immediate action by the pilot. The single most important consideration is aircraft control.

• Successful, safe NVD programs are generally those in which commanders are involved and participate.

In most NVD-related accidents, the following circumstances were present:

• Lack of contrast and visual cues.

• Lack of crew communication and coordination and "total crew" training.

• Flying too fast based on visual cues and conditions present.

• Lack of recent NVD flight experience.

• Inability to determine distance to obstructions.

• "Invisibility" of wires.

• Sensing that things are about to turn bad and failing to take corrective action.

Although the points in this article are by no means all-encompassing for NVD flight, the lessons learned from past accidents can help one operate more safely at night.

U.S. Army Class A Aviation Flight Mishaps

	Number	Flying Hours	Rate	Army Fatalities	Total Cost (in millions)
FY87 (through 15 April)	16	831,278	1.92	19	$36.9
FY88 (through 15 April)	13	898,707*	1.45	29	$41.7

*estimated

PEARL'S

Personal Equipment And Rescue/survival Lowdown

ALSE/AEROMED Evaluations

Headquarters, Army Materiel Command (AMC), aviation life support equipment (ALSE)/aeromedical (AEROMED) evaluations for AMC units will be conducted by and in conjunction with AMC aviation safety personnel visits. Unfortunately, these visits are mandated by the Aviation Resource Management Survey (ARMS) regulation. The ARMS team from the AMC aviation safety office has been reduced from four to two members. Hopefully, this is only a temporary setback.

BDU Flight Suit

The battle dress uniform (BDU) flight suit program is alive and well according to CPT Fahlsing at the Directorate of Combat Developments, Ft. Rucker, AL, and is proceeding on schedule. All test sites have been stocked and testing is underway (January through June 1988). Type classification is expected in October 1988, and about 2 years later the uniforms should be available for issue.

FM 1-508-1

Field Manual (FM) 1-508-1, "Maintaining ALSE," remains valid. The goal is to expand ALSE FM chapters to include needed reference information. Subsequent series manuals will not be published. Reasons include a lack of writers at the Ft. Eustis, VA, ALSE school and a lack of money for publication. But, more importantly, inspections revealed that some personnel rely on FM 1-508-2, "Maintaining ALSE," for maintenance reference purposes. See March 1988 *Aviation Digest*, PEARL'S, Recission of FM 1-508-2, for information on retaining this FM. Although convenient, FM 1-508-2 was never intended to replace the appropriate equipment technical manual.

ALSE Training Schools and Classes

The following information pertaining to ALSE schools and classes is furnished:

Fort Eustis ALSE School News and Classes

Recently, the TRADOC commander determined that the ALSE specialists and ALSE supervisors courses would be eliminated effective 3 March 1988. These two courses have been replaced by the ALSE Technician Course, Number 600-ASIQ2/4D-AS11F. This course is available to officers, enlisted and civilian personnel. The 500 series designations are the supervisor's course. The new class number, reporting and closing dates are listed below.

Class No.	Reporting Date	Closing Date
10-88	31 March 1988	11 May 1988
503-88	31 March 1988	11 May 1988
11-88	14 April 1988	25 May 1988
504-88	14 April 1988	25 May 1988
12-88	28 April 1988	9 June 1988
505-88	28 April 1988	9 June 1988
13-88	12 May 1988	23 June 1988
506-88	12 May 1988	23 June 1988
14-88	30 May 1988	11 July 1988
507-88	30 May 1988	11 July 1988
15-88	14 June 1988	26 July 1988
508-88	14 June 1988	26 July 1988
16-88	28 June 1988	9 August 1988

Army Western Region ALSE/Survival School (AWRASS)

The AWRASS is located at 6229th Reserve Forces School, Building 614, Vancouver Barracks, WA 98661-3826. See February and April 1988 *Aviation Digest*, PEARL'S, AWRASS, for additional information. Inquiries and more information about enrollment in the Overwater Survival Courses should be directed to the ALSE officer at Sixth Army, AUTOVON 586-3884/4133 or Commercial 415-561-3883/4133.

1-6 May 1988	Basic Land Survival	8814SB
10-11 May 1988	Overwater Survival	8815SW
8-13 May 1988	Basic Land Survival	8816SB
17-18 May 1988	Overwater Survival	8817SW
14-19 August 1988	Hot Weather Survival	8818SH
23-24 August 1988	Overwater Survival	8819SW
30-31 August 1988	Overwater Survival	8821SW

NOTE: The uniform for this class is soft cap with flight suit or BDUs. Survival vests must be worn to class and in the field. Writing materials are required in the field.

ALSE Military Occupational Specialty

The manpower requirements criteria (MARC) study documents were approved by Headquarters, DA, on 22 February 1988. See April 1988 *Aviation Digest*, PEARL'S MARC Study, for background information. ALSE repre-

sentative for career management field 67, additional skill identifier Q2, is Mr. Brown, AUTOVON 680-3121.

A copy of the above criteria will be published in the next edition of the organization documentation update (ODU). The criteria published in the ODU should be used in the development of tables of organization and equipment (TOE) until Army Regulation (AR) 570-2, "MARC Tables," is revised. It looks like we are finally on our way, we've kept the faith and ALSE will benefit by our "push."

(The following items are reprinted from STACOM 126, 27 January 1988, published in *Flightfax*, 27 January 1988.)

NVG Training Requirements

What are the night vision goggles (NVG) currency training requirements?

Aviators occupying tables of distribution and allowances (TDA) or TOE designated NVG positions, must complete the following to be considered current:

- Every 45 days, make no less than one NVG or day vision goggles (DVG) flight of 1-hour duration while occupying a crewstation that allows access to the flight controls. (Compatible visual flight simulator, using NVG, may be substituted for DVG.)
- Every 90 days, make no less than one NVG flight at night of 1-hour duration while occupying a crewstation that allows access to the flight controls.
- Meet continuation training requirements as outlined in Field Circular (FC) 1-219, "Aircrew Training Manual NVG," paragraph 2-6.

Aviators not occupying TDA or TOE designated NVG positions, but performing NVG duties at the direction of the commander, must complete the following to be considered current:

- Every 45 days, make no less than one NVG or DVG flight of 1-hour duration while occupying a crewstation that allows access to the flight controls. (Compatible visual flight simulator, using NVG, may be substituted for DVG.)
- Every 90 days, make no less than one NVG flight at night of 1-hour duration while occupying a crewstation that allows access to the flight controls.

An aviator whose currency has lapsed must complete an NVG currency evaluation, conducted by an NVG instructor pilot (IP) or standardization instructor pilot (SIP), at night at a minimum of 1-hour duration. This flight must be done occupying a crewstation with access to the flight controls and all maneuvers listed under currency in FC 1-219, table 2-4, must be evaluated.

Currency must be maintained in designated aircraft by mission, type, design and series. Therefore, an aviator who is NVG qualified, current in the UH-1 Huey and is NVG qualified but not current in the UH-60 Black Hawk, must complete a currency evaluation in the UH-60 as outlined for an aviator whose currency has lapsed before performing duties in the UH-60.

NOTE: Aircraft are listed by mission, type, design and series in AR 95-1, "General Provisions and Flight Regulations," paragraph 3-8.

Aviators occupying TDA or TOE designated NVG positions and those aviators not occupying TDA or TOE designated NVG positions, but performing NVG duties directed by the commander, must successfully complete an annual NVG flight evaluation conducted by an NVG IP or SIP. This flight will be conducted at night with the examinee occupying a crewstation with access to the flight controls. The minimum mandatory maneuvers will be in accordance with (IAW) FC 1-219, table 2-4, listed under standardization evaluation.

Are the 1.5 hours of static cockpit of synthetic flight training systems (SFTS) required for NVG refresher training and do they also count toward the 4.5 to 7.5 flight-hour requirement?

Yes, the 1.5 hours of static cockpit of SFTS training are required for refresher training. They do not count toward total flight time.

DVG Operations

Flights with the AN-PVS-5 series NVG and day vision filters are authorized as follows:

- DVG flights will be conducted using full faceplate (AN/PVS-5 series) goggles with day vision filters only. (NOTE: AN/PVS-5C NVGs are restricted from aviation use.)
- While conducting DVG flights both aviators must be NVG qualified. DVG flights will be conducted by one aviator at a time; the additional pilot acts as a safety pilot. Both pilots must be qualified and current in the aircraft being flown. (The safety pilot does not need to be NVG current.)
- During qualification training, mission training and continuation training, DVG operations and time accrued may be used IAW FC 1-219 and current directives.
- At no time will night-aided flights be conducted using full faceplate goggles.
- Modified faceplate goggles and the "GX-5" flip-up are not authorized for day use.

If you have a question about personal equipment or rescue/survival gear, write PEARL'S, AMC Product Management Office, ATTN: AMCPM-ALSE, 4300 Goodfellow Blvd., St. Louis, MO 63120-1798 or call AUTOVON 693-3573 or Commercial 314-263-3573.

JOINT COMBAT AIRSPACE COMMAND AND CONTROL COURSE

Major Vernon M. Huggins, U.S.Army
U.S. Air Force Air Ground Operations School
Hurlburt Field, FL

DURING THE ALLIED invasion of Sicily (July and August 1943), Army Major General George S. Patton Jr. ordered the beachhead at Gela, Sicily, reinforced by paratroopers. On 11 July 1943, 2,000 Army airborne troops were flown to the dropsite in 144 C-47 aircraft. Good weather and advanced notification to Allied naval and ground forces promised a relatively easy mission. Disaster struck, however, when a single machinegunner started firing at the C-47s in the second flight over the beach. Within minutes every Allied antiaircraft gun on shore and water was firing at the slow, vulnerable troop carriers. Gunners on the destroyer U.S.S. *Beatty* fired at one C-47 even after it had been ditched in the bay. Total losses included 81 dead, 132 wounded and 12 missing paratroopers; and 7 dead, 30 wounded and 52 missing airlifters.*

This historical example is but one of many that highlights the importance of our requirement to command and control (C^2) airspace users essential in successful joint operations. As the numbers of airspace users increase and their capabilities become more significant, the problem of adequately commanding, controlling and integrating the airspace users proportionately increases. Training is part of the solution to this formidable problem, if we are to avoid a recurrence of disasters like the tragedy that occurred in Sicily.

The U.S. Air Force (USAF) Air Ground Operations School is developing a new course of instruction—Joint Combat Airspace Command and Control (J-CACC). This course will train selected officers and noncommissioned officers to plan, coordinate, control and integrate airspace control procedures and techniques during joint combat operations.

J-CACC is coming, and it is certainly needed. Although deconflicting joint airspace seems simple enough to keep aircraft and projectiles out of the same airspace at the same time, the actual practice of deconflicting joint airspace use while enhancing combat operations is extremely difficult. The decisions made to control airspace users, the amount of risk to accept, and the dissemination and implementation of decisions concerning airspace use are recognized as enormous tasks for our leaders. Tasks that must be accomplished for successful joint operations. In joint warfighting, the joint force commander will appoint an airspace control authority (ACA). The ACA will plan and coordinate airspace control matters and operation of the airspace control system.

We must clearly understand the relationship and responsibilities of the Army's airspace users to the ACA. J-CACC will help us with this most important undertaking.

The J-CACC course will focus on combat airspace C^2 doctrine, techniques and procedures necessary to integrate effectively airspace users into joint combat operations. It will provide essential personnel with an understanding of fundamental airspace planning, coordination and execution performed at U.S. ground force echelons of division and above. It also will provide U.S. Air Force C^2 elements associated with the Tactical Air Control System and the Combat Information System Group. Emphasis will be placed on the planning and day-to-day, minute-to-minute adjustments needed to execute airspace plans to meet dynamic real-time mission requirements. This will include the information required to support decisionmaking, information assessment and dissemination, as well as systems and procedures used to implement airspace control orders that will be published by the ACA.

The course normally will be taught in 1 calendar week and is scheduled to follow the Battle Staff Course (BSC), which is a prerequisite to attendance. If you have attended BSC within the last 2 years, you may attend the J-CACC course with some refresher training provided 1 duty day before the start day of the J-CACC course.

Instruction consists of lectures, planning exercises, guided discussions and an execution exercise. Instruction encompasses all course objectives, and the preparation for, and participation in the exercise requires the application of information and knowledge to coordinate and deconflict airspace used in

*Shrader, Charles R. *Amicide: The Problem of Friendly Fire in Modern War*. Ft. Leavenworth, KS: U.S. Army Combat Studies Institute, 1982.

a joint theater of operation.

Attendees should be assigned to positions that are directly involved in the planning and execution of joint airspace use. Members of the airspace management element at the tactical air control center, airspace management liaison section at the battlefield coordination element and the control and reporting center, Army airspace C^2 elements of corps and division and liaison personnel to tactical air force elements are the target population of attendees.

Quotas for Army students are controlled by Headquarters, U.S. Army Training and Doctrine Command, ATTN: ATTG-MPS, AUTOVON 680-3001, and Air Force students by Headquarters, U.S. Air Force Military Personnel Center, ATTN: DPMROP. The first class was scheduled for 16 May 1988 and another class is scheduled for 29 August 1988. In FY1989 and subsequent years, five classes are scheduled after the completion of a BSC.

J-CACC is coming and is needed. We must ensure the right people attend; increased combat effectiveness will result.

Mr. John A. Moore

Mr. Wendell W. Shivers

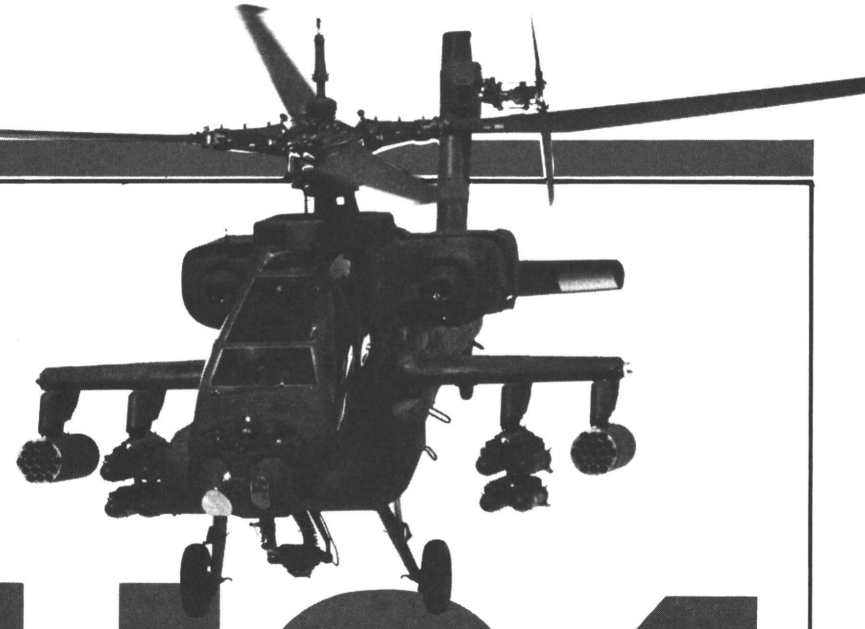

AH-64

A TOTAL SYSTEM FOR BATTLE

This article is the eleventh in a series on the AH-64A Apache aircraft and weapons systems. The systems addressed include the point target weapon system and the area weapons system. The information contained in this article should familiarize the reader with the AH-64A; however, it must *not be used to operate or maintain the aircraft.*

Point Target Weapon System (PTWS)

The PTWS (figure 1) is the primary armament of the AH-64A for neutralizing tanks and other hard, point type targets.

PTWS Major Capabilities

The PTWS employs the HELLFIRE laser (LSR) guided missile (MSL). The capabilities are as follows:

- Day and night operations.
- Single and multiple launch sequences.
- Line-of-sight and masked launches.
- Use of onboard, scout and/or remote designators.

HELLFIRE Modular Missile System (HMMS)

The HMMS consists of one launcher assembly and up to four HELLFIRE missiles loaded on the launcher. One HMMS can be attached to each pylon, giving the AH-64A the capability of carrying and employing 16 HELLFIRE missiles.

HELLFIRE Terms

Lock-on before launch (LOBL). The HELLFIRE laser seeker has acquired and locked on to reflected laser energy, and is tracking the laser energy before launch.

Lock-on after launch (LOAL). The HELLFIRE missile leaves the aircraft and the seeker acquires and locks-on to reflected laser energy while the missile is in flight.

Autonomous designation. The aircraft provides its own laser designation for missiles launched. The designation may be done in either the LOBL or LOAL mode.

Remote designation. Targets are designated by another aircraft or ground designator. The designation may be done in either the LOBL or LOAL mode. The designator must not be more than 60 degrees from the gun target line. (The reflected laser energy may be insufficient for seeker acquisition/tracking.) The designator should not be within a ±20-degree fan from the aircraft to the target line.

HELLFIRE Missile

The HMMS missile is available in three configurations: dummy, training and tactical. All three missiles have the same physical characteristics.

Weight—about 100 pounds.
Length—64 inches.
Diameter—7 inches.
Wingspan—13 inches.

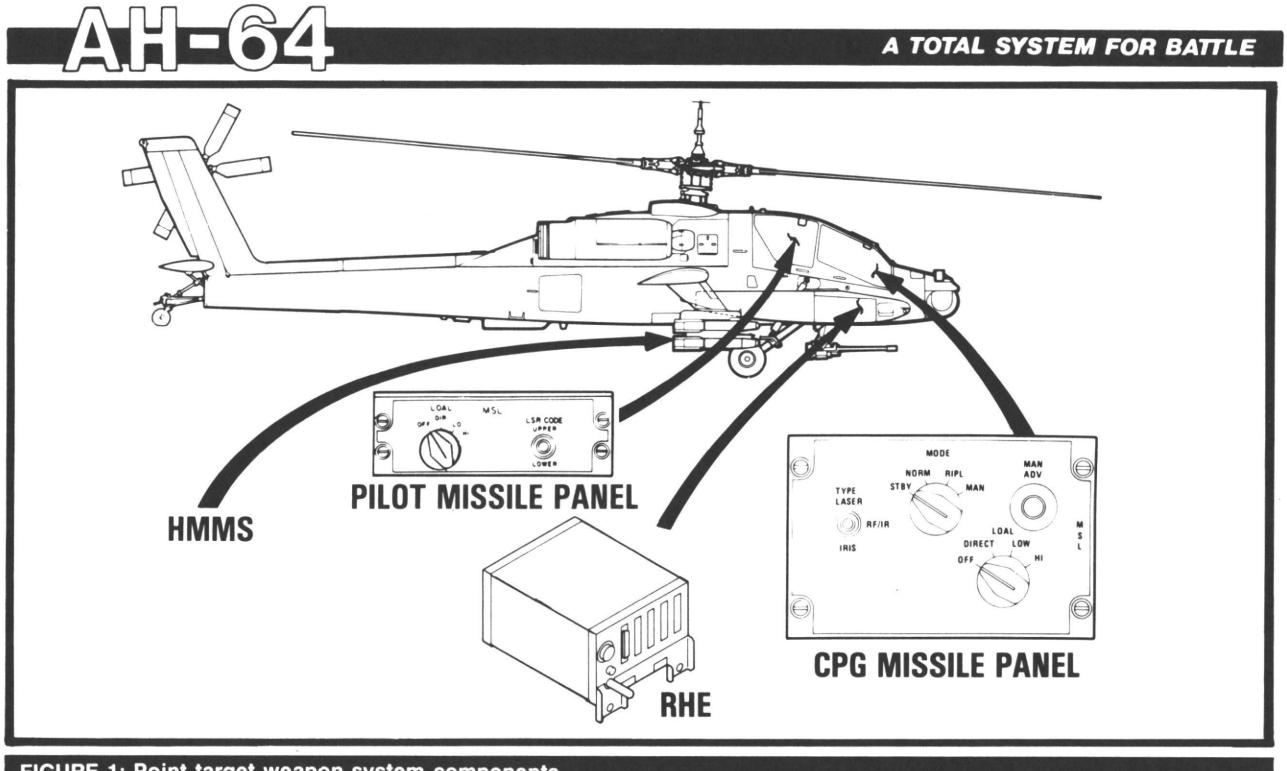

FIGURE 1: Point target weapon system components.

Remote HELLFIRE Electronics (RHE)

The RHE processes data from the fire control system to encode and mode the HMMS as setup by the aircrew. It processes data from the missiles to the fire control system for action and/or display.

The RHE is powered and in a standby (STBY) condition whenever electrical (ELEC) power is on the buses and both the direct current ELEC and alternating current ELEC circuit breakers are in.

When either crewmember brings the fire control panel to the safe or armed (ARM) condition and places the MSL switch to the *ON* position, the RHE will start communications with the fire control system. Also, at this time, power is applied to the launchers.

Pilot's Missile Panel

This panel (figure 2) provides switches to enable the pilot to control missile delivery mode and priority channel (CHAN) designation. It is located in the left console and is enabled when the pilot's fire control panel is in either the safe or ARM condition and the MSL switch is in the *ON* position.

LOAL selector (SEL) switch. This switch enables the pilot to select the delivery mode for the missile system. Its operation is identical to the copilot gunner's (CPG's) LOAL SEL switch.

LSR code switch. This three position, spring-loaded-to-center switch is enabled when the pilot places his MSL switch in the *ON* position when the fire control panel is in either the safe or ARM condition. Activating the switch to either the UPPER (UPR) or LOWER (LWR) position establishes that code and quantity (QTY) setup (as set on the CPG's fire control panel) as the priority channel; by default, the other code and QTY becomes the alternate channel. It also causes the RHE to read and respond to the LSR MSL switch positions (CPG's fire control panel) and the CPG's MSL panel MODE and TYPE switch selections.

If the pilot actions the missile system, the PTWS will automatically mode to the normal (NORM) fire delivery mode, overriding the CPG's MSL panel MODE switch position.

CPG's Missile Panel

This panel (figure 3) provides switches to enable the CPG to control missile type selection, missile delivery mode, fire delivery mode and device functions. It is located in the left-hand console, and provides the CPG the means to employ the PTWS against either autonomously or remotely designated targets in either the LOBL or LOAL mode or a combination of both.

MODE SEL switch. This switch enables the CPG to select the fire delivery mode of the PTWS.

STBY position. This position places the PTWS in the STBY mode, deselecting any selected missile(s) and deprioritizing the missile system.

NORM position. With the MODE switch in the NORM position, and then prioritizing the missile system, the missile system will be placed in the NORM mode of operation.

Ripple (RIPL) position. With the MODE switch in the RIPL position, and then prioritizing the missile system, the missile system will be placed in the RIPL mode of operation.

Manual (MAN) position. With the MODE switch in the MAN position, and then prioritizing the missile system, the missile system will be placed in the MAN mode of operation. When prioritized, the RHE will default the priority channel QTY selection to a QTY of one.

Since the RHE will only select and encode one missile on the priority channel, reprioritizing the missile system will cause the RHE to re-encode the missile seeker with the code of the designated priority channel.

Built-in test cannot be conducted with the MODE switch in this position. Placing the MODE switch in this position will terminate built-in test and places the missile system in STBY.

TYPE switch. This switch enables the CPG to select the missile seeker to be

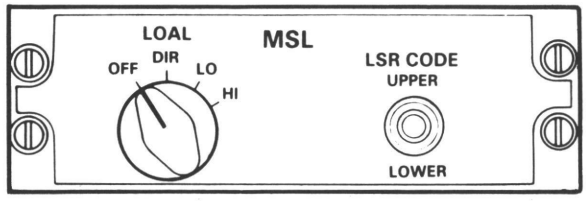

FIGURE 2: Pilot's missile panel.

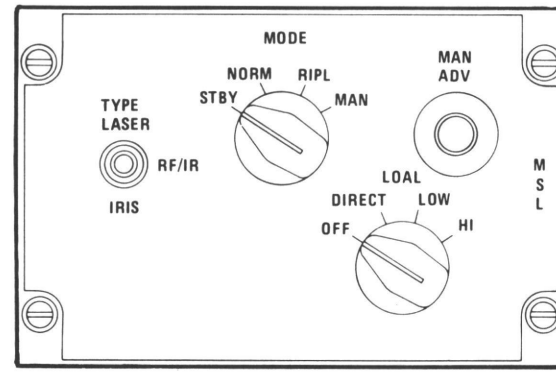

FIGURE 3: Copilot gunner's missile panel.

employed. The selection is validated when the system is prioritized.

Laser position. This position specifies that laser seeker missiles are to be launched. If the TYPE switch is in this position, no laser missiles are present, and the system is prioritized, the message *NO TYPE* will be displayed.

Radio frequency/infrared and infrared imaging seeker position. This growth position is for advanced (ADV) missile concepts.

LOBL SEL switch. This switch enables the CPG to select the delivery mode for the missile system.

• *Off position*. This position selects the LOBL mode. In this mode, the seeker must be locked onto the reflected laser energy or the missile cannot be launched.

• *Direct (DIR) position*. This position selects the LOAL mode with the DIR missile flight trajectory. In this mode, the missile may be launched "in constraints" (first trigger detent) or "out of constraints" (second trigger detent).

• *Low (LO) position*. This position selects the LOAL mode with the LO missile flight trajectory.

• *High (HI) position*. This position selects the LOAL mode with the HI missile flight trajectory. In this mode, the missile also may be launched either in or out of constraints.

MAN ADV/DEVICE pushbutton. This button provides independent functions, dependent on the CPG's MSL panel MODE switch.

Laser Seeker

This seeker detects properly coded laser energy and provides line-of-sight information to the missile autopilot and, while on the rail, to the RHE.

The gyro-optics assembly is spun to provide stability for the detector/preamplifier assembly, and has a 30-degree polar gimbal limit.

The seeker has four operating modes.

• *Cage*. The seeker is inhibited from slaving or tracking until the gyros are spun up.

• *Scan*. The seeker is moved in a predetermined search pattern in the LOBL mode to help it acquire and lock on to a laser spot.

• *Slave*. The seeker is positioned in response to a line-of-sight command from the RHE.

• *Track*. The seeker is commanded by the electronics assembly to maintain the reflected laser energy centered on the detector/preamplifier assembly.

CPG's Fire Control Panel

This panel (figure 4) provides the CPG the means to enable the PTWS; and selects missile quantities and codes, priority channel and laser counter-countermeasures (CCM).

MSL switch. The MSL switch is enabled when the CPG's fire control panel is in either the safe or ARM condition.

• *Off position*. Places the RHE in the STBY condition, deselecting all selected missiles and removing power from the launchers.

• *On position*. Enables the RHE to respond to the CPG's MSL panel MODE switch, and causes power to be applied to the launchers' HMMS.

MSL UPR CHAN LSR CODE pushbutton switch. This eight-position, pushbutton switch has positions labeled A through H. It is used to select the alphabetic laser code corresponding to the numeric code stored in that designated location within the fire control computer that is to be used by one of the two missile channels.

MSL UPR CHAN QTY pushbutton switch. This four-position, pushbutton switch has positions labeled 0 through 3. It is used to select the QTY of missiles that will be encoded and spun-up with the code selected by the MSL UPR CHAN LSR CODE pushbutton switch. If the position 0 is selected, the system will default to one missile selected.

MSL LWR CHAN LSR CODE pushbutton switch. This switch functions identically to the MSL UPR CHAN LSR CODE pushbutton, except it will select the alphabetic laser code to be used by the second missile channel.

MSL LWR CHAN QTY pushbutton switch. This switch functions identically to the MSL UPR CHAN QTY pushbutton switch, except it will select the QTY of missiles that will be selected

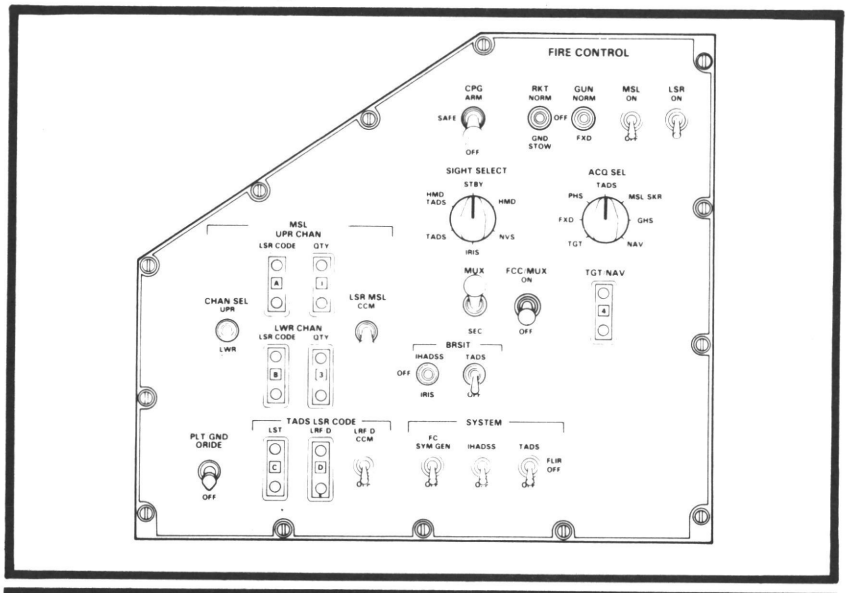

FIGURE 4: Copilot gunner's fire control panel.

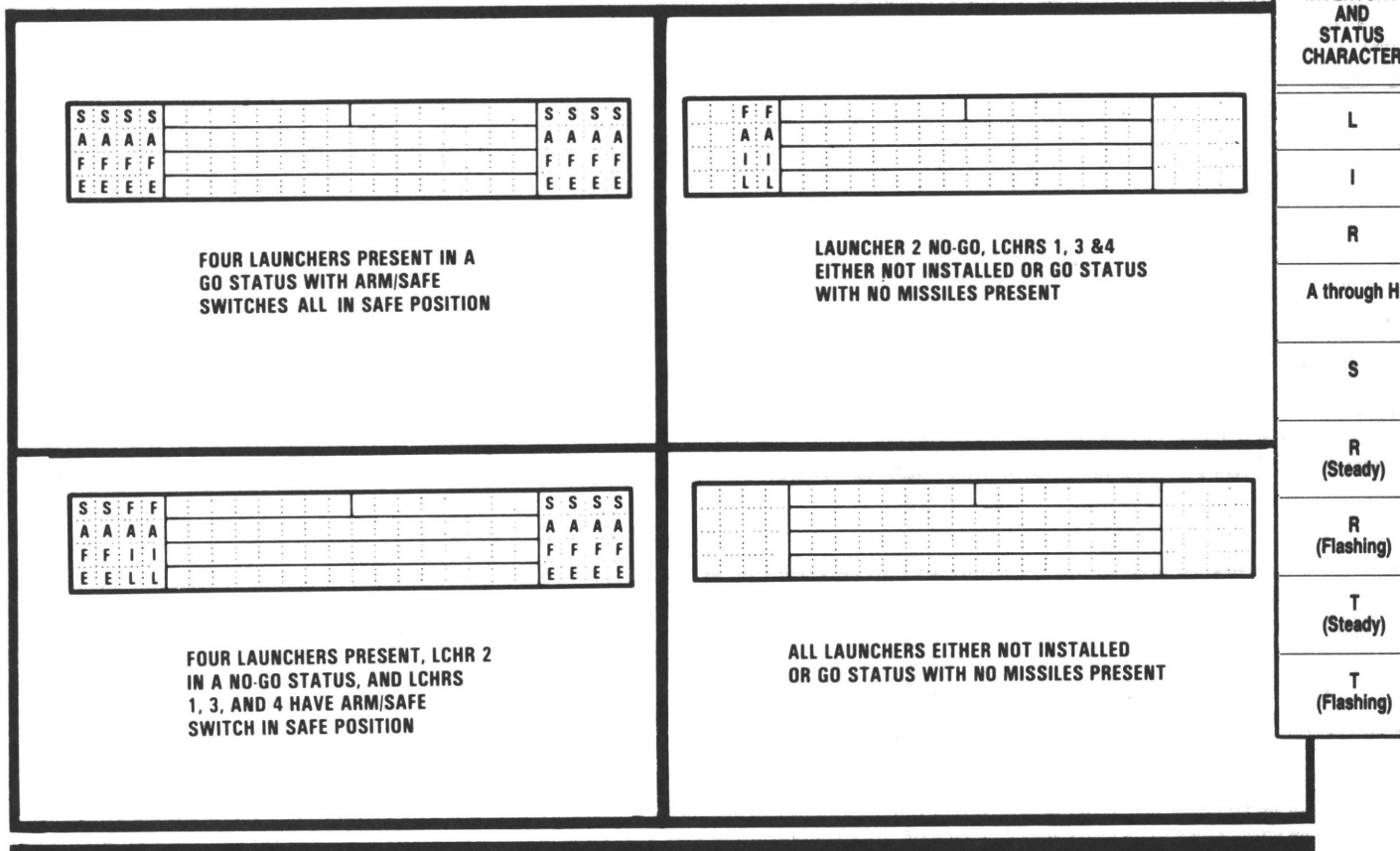

FIGURE 5: Point target weapon system launcher status.

and spun-up with the code selected by the MSL LWR CHAN LSR CODE pushbutton switch.

CHAN SEL switch. This three-position switch is spring loaded to center switch that is enabled when the CPG places the MSL switch to the *ON* position and the MODE switch is not in the STBY position. Once enabled, activating the switch to either the UPR or LWR position establishes that code and QTY setup as the priority channel. By default, the other code and QTY become the alternate channel. Either position commands the RHE to read and respond to the LSR MSL switch positions and the CPG's MSL panel MODE and TYPE switch selection.

LSR MSL switch. This switch enables the CCM routine within the missile.

PTWS Launcher Status

If at least one launch station (launcher electronics and pylon multiplex remote terminal unit) is *GO* (figure 5), the following status may be displayed in the appropriate portion of the alphanumeric display (AND) 4 by 4 section for all launch stations:

- The launcher electronics have failed built-in test, the serial/digital data link between the pylon multiplex remote terminal unit and the launcher electronics have failed, or the pylon multiplex remote terminal unit has failed.
- The launcher ARM/SAFE switch is in SAFE position. It may be ARM by bringing either fire control panel up to ARM status, or by manually placing the switch to the ARM position.
- No display indicates launcher is either not present or the launcher status is *GO* and no missiles are loaded on that launcher.

The AND 4 by 4 sections are dedicated for PTWS status/inventory displays; "ACTIONING" the PTWS is not necessary to enable the AND 4 by 4 sections.

Missile Status AND Inventory

The following characters will be displayed in the alphanumeric display 4 by 4 section, based on the status of a missile. The single status characters are displayed below the inventory or code characters (figure 6). The multiple character status indicators use both positions.

The status of all missiles is continuously displayed on the AND. The types of missile failures that will prevent the missile displaying that status from being launched are shown in figure 6.

A variety of sight and weapon status messages can be displayed in the pilot's and CPG's helmet mounted display. These will not be covered in this article, but are detailed in TM 55-1520-238-10, chapter 4.

DESCRIPTION
Laser missile.
Infrared imaging seeker missile.
Radio frequency/infrared missile.
Code of the laser missile in place of the "L" indication.
Missile has been selected manually or by the RHE automatic selection process.
The missile is encoded and ready for employment.
The LOAL priority channel missile that will be the next launched missile.
Missile seeker is locked on the appropriately coded laser spot and is tracking.
The LOAL priority channel missile that will be the next launched missile.

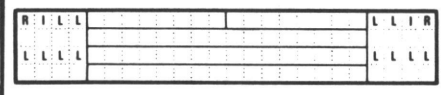

MISSILE INVENTORY

2 RF IR MISSILES ((R)
2 IRIS MISSILES (I)
12 LASER MISSILES (L)

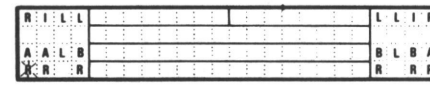

MISSILE STATUS

3 LASER MISSILES CODED "A" CODE. NO 1
NEXT TO BE LAUNCHED (LOAL) (FLASHING R)
3 LASER MISSILES CODED "B" CODE AND READY (R)

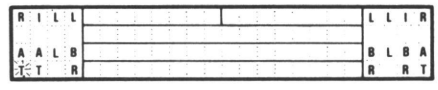

MISSILE STATUS

3 LASER MISSILES CODED "A" CODE AND TRACKING, NO 1
NEXT TO BE LAUNCHED (LOBL) (FLASHING T)
3 LASER MISSILES CODED "B" CODE AND READY (R)

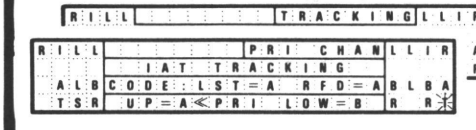

TYPICAL DISPLAY AFTER MISSILE 1 LAUNCHED

MISSILE 2 NOW NEXT TO BE LAUNCHED (LOBL) (FLASHING T)
MISSILE 11 HAS BEEN SELECTED AND IS BEING ENCODED (S)
THE LASER DESIGNATOR AND LASER SPOT TRACKER ARE
BOTH CODED TO THE PRI CHANNEL (UPPER)
AT LEAST ONE PRI CHAN MISSILE IS TRACKING THE LASER SPOT
THE TADS IMAGE AUTO TRACKER IS TRACKING THE TARGET

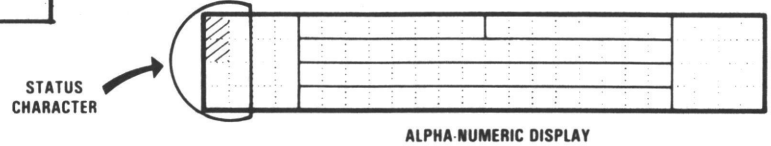

ALPHA-NUMERIC DISPLAY

STATUS CHARACTER	DESCRIPTION
M U	*The missile is unlatched on the launcher.*
M F	*The missile has failed built-in test or has been detected as failed subsequent to built-in test.*
S F	*The missile launch station detected as failed.*
T F	*The pylon multiplex remote terminal unit cannot communicate with the selected missile. Once detected for one missile on a launcher, all missiles on that launcher will reflect this status. This fault may be cleared by cycling the MODE switch to STBY, then back to the desired position.*
N A	*Missile has been detected as not available, low coolant or hangfire in progress.*

STATUS CHARACTER	DESCRIPTION
	NOTE: Missiles that reflect R or T, steady or flashing, on the same side of the helicopter as a missile that is hangfiring will reflect this status for 6 seconds from onset of hangfire, and will be inhibited from launch for this period of time.
M A	*Missile launch sequence has aborted or missile has misfired.*
M H	*Missile is in the process of hangfiring or has hangfired.*
	WARNING: M A or M H are valid indications of misfired/malfunctioning ordnance. Appropriate safety and ordnance disposal procedures will be accomplished in accordance with the standing operating procedure.

FIGURE 6: Missile status alphanumeric display inventory.

Missile Constraints Symbols

When the pilot "actions" the PTWS, constraint symbology (figure 7) will be presented to the pilot. When the CPG "actions" the PTWS, constraint symbology will be present to both crewmembers.

The symbology is used to indicate when all launch constraints have been satisfied.

Before satisfaction of launch constraints, the open or dashed out-of-constraints box will be displayed. The LOAL box represents 7.5 by 7.5 degrees; the LOBL box represents 20 by 20 degrees. The weapon's trigger may be pulled to the second detent to override performance launch constraints to launch the missile; however, safety constraints cannot be overridden.

The symbology is directional. The pilot steers the helicopter toward the symbology.

When all constraints are satisfied, the box will go solid. The missile should be launched at this time as the box does not have to be around the target or line-of-sight reticle to meet constraints.

Laser Missile Engagements

The laser missile engagements (figure 8) include the following firing modes:

- Single fire, which is the launching of one missile at one target, with only one missile in flight at any time.
- Rapid fire, which is the rapid fire mode involving the launching of multiple laser missiles every few seconds using a single code. A single laser designator moves from one target to the next as each kill is complete.
- RIPL fire, which involves multiple laser missiles coded with different laser codes. Targets are illuminated by two laser designators, one coded for each missile channel. RIPL fire of the missiles is sequential, with the priority coded missile being launched first.

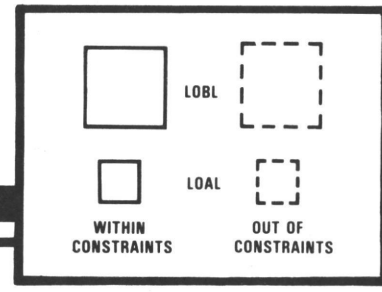

FIGURE 7: Missile constraint symbols.

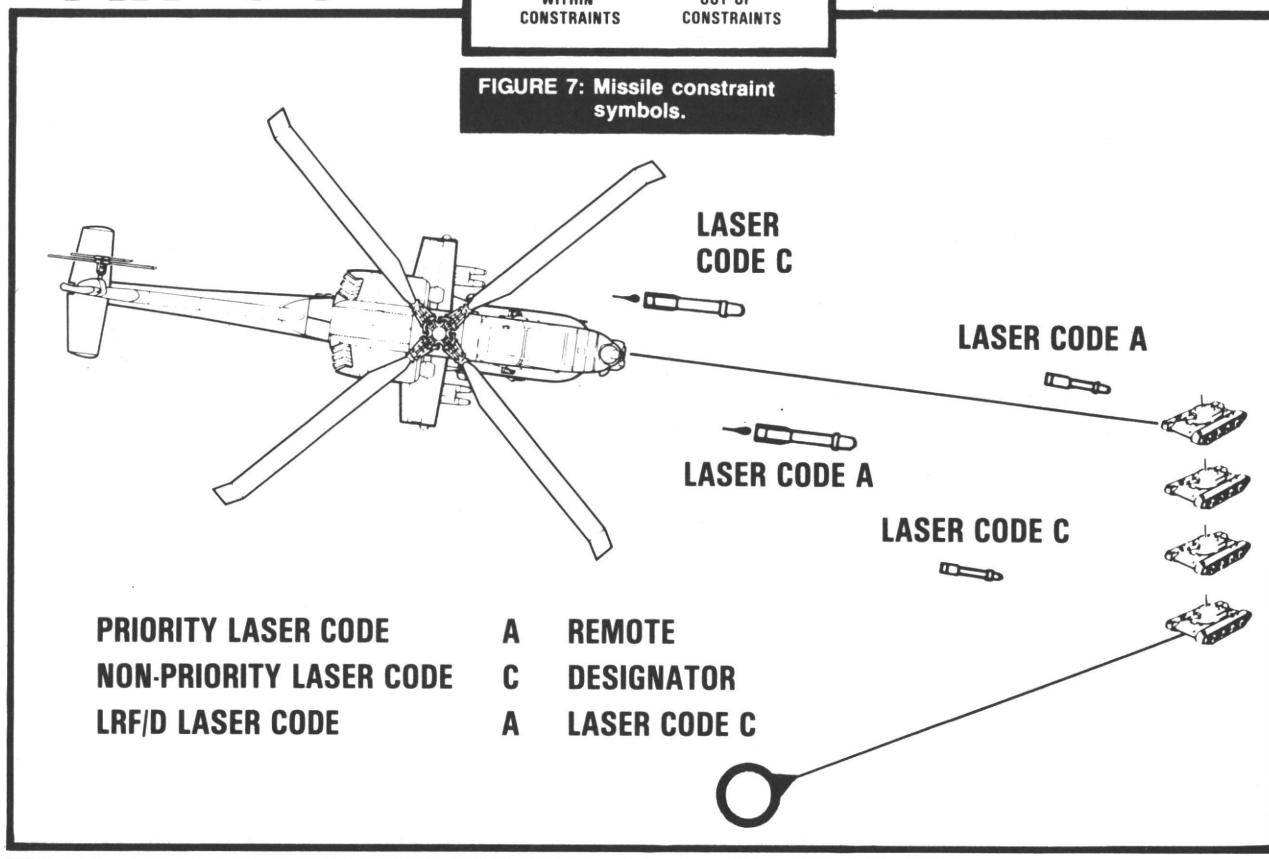

FIGURE 8: Laser missile engagements.

Area Weapons System (AWS)

The components of the AWS (figure 9) and their locations on the aircraft are as follows:

• **The Ammunition (ammo) Handling System (AHS) that includes:** the magazine located in the ammo bay; the feed chute routed from the magazine, along the right side of the aircraft, to the gun; the return chute routed from the gun, along the left side of the aircraft, to the magazine.

• **The turret** is mounted to the underside of the aircraft, between the two crewstations.

• **The gun** is mounted into the turret.

• **The turret control box (TCB) and gun control box (GCB)** are both located in the right forward avionics bay (RFAB).

• **The rounds counter/magazine controller** is located behind an access panel in the left ammo feed mechanism fairing. Switches are provided for uploading/run and setting of the rounds counter.

The Ammunition Handling System

The AHS (figure 10) stores and transports XM788, XM789 and the

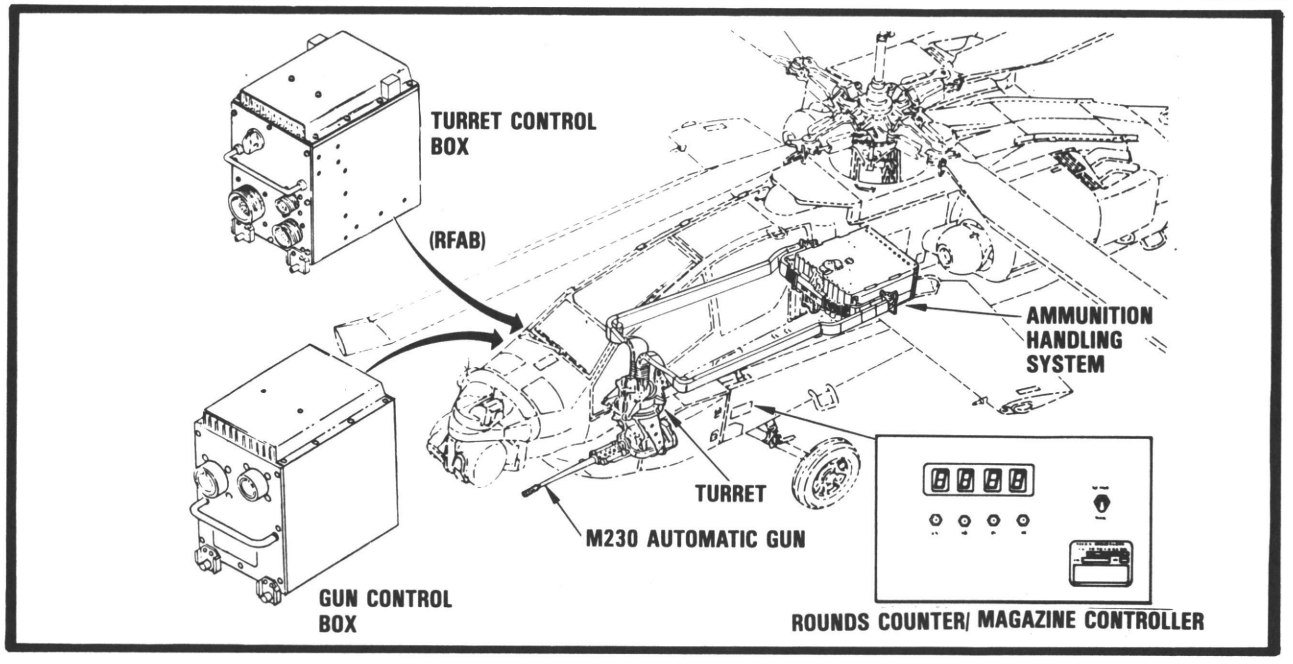

FIGURE 9: Area weapons system component locations.

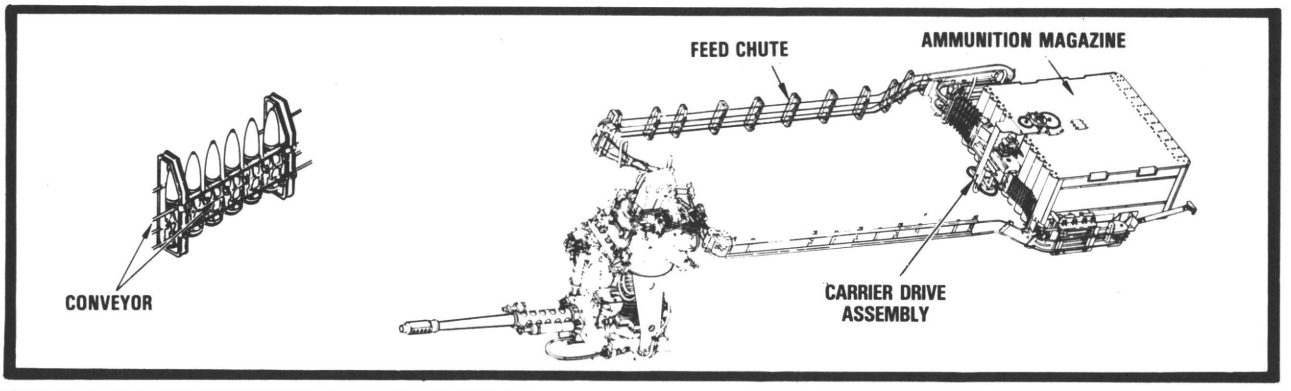

FIGURE 10: Ammunition handling system components.

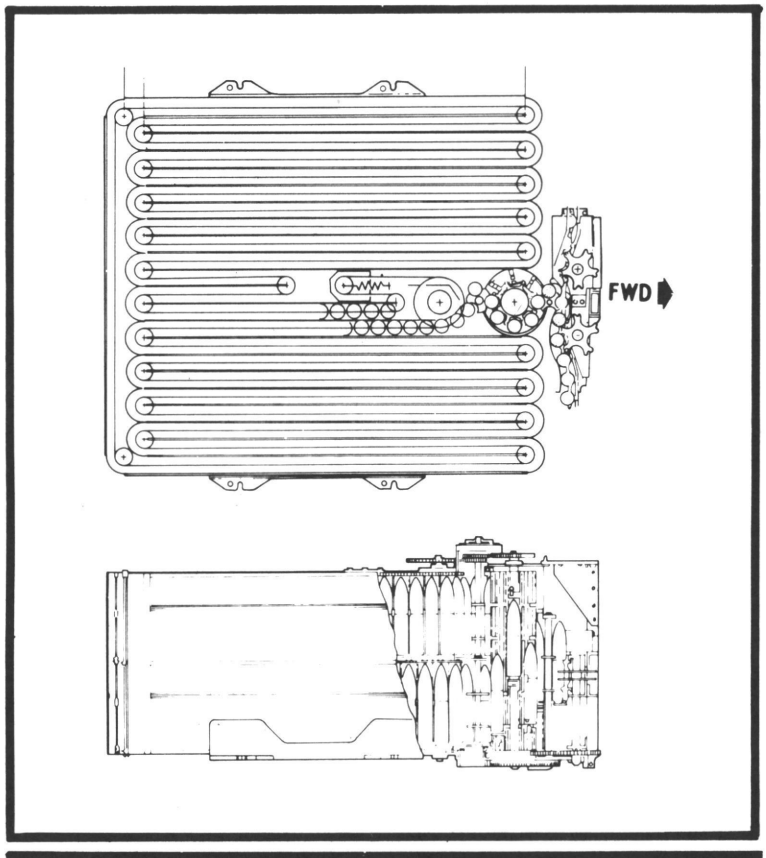

FIGURE 11: Storage container layout.

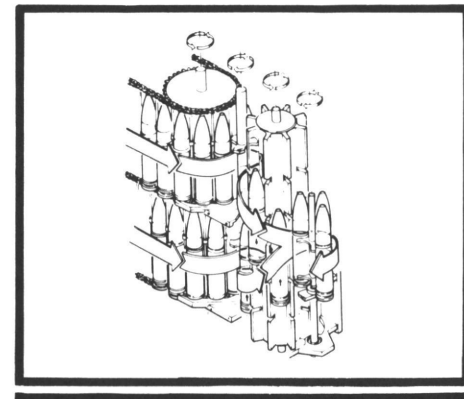

FIGURE 12: Accelerator/merger assembly.

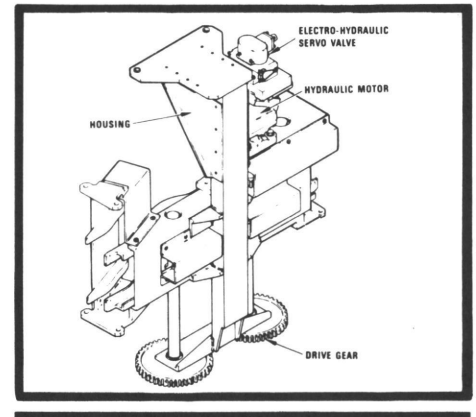

FIGURE 13: Carrier drive assembly.

ADEN/DEFA families of 30 mm ammo to the gun.

The "FLATPAK" magazine is located in the ammo bay and an ammo conveyer system is located within the left and right FABs.

The complete system has an estimated empty weight of 199.8 pounds, and with a full complement of about 1,110 rounds, weighs 1,054.5 pounds.

The remaining 90 rounds are stored in the feed chute, giving a total of 1,200 rounds.

Storage container

The storage container (figure 11) provides round storage and transport.

There are 1,110 rounds stored in a bilevel ammo magazine. Round transport is by an endless chain ladder serpentine path consisting of 20 horizontal runs fore and aft and one return run left to right.

Chain tensioner

This unit provides for 2 inches of forward and aft takeup in the chain. It also provides for thermal expansion of the chain ladder with respect to the storage container.

The chain tensioner is located near the forward end of the storage container. It is comprised of a fixed (FXD) unit attached to the storage container top and bottom, and a sliding unit that incorporates the chain takeup feature.

When the gun firing circuit is activated, the sliding unit is allowed to compensate for startup torque loads and steady-state firing transients by moving back and forth while maintaining chain tension.

The endless chains within the magazine receive power through a geartrain from the carrier drive. This power is supplied by the utility hydraulic system. The chains move in one direction during firing and move in the opposite direction for uploading.

Accelerator/Merger Assembly

The ammo within the magazine moves at one-half the rate of the ammo that is traveling to the gun in the carrier. To feed ammo from the two-level magazine into the one-level carrier, an accelerator and a merger assembly (figure 12) work together to transfer ammo to the 0 carrier drive assembly.

The accelerator/merger receives rounds alternately from the LWR and UPR magazine levels, merges the rounds to the same level, accelerates

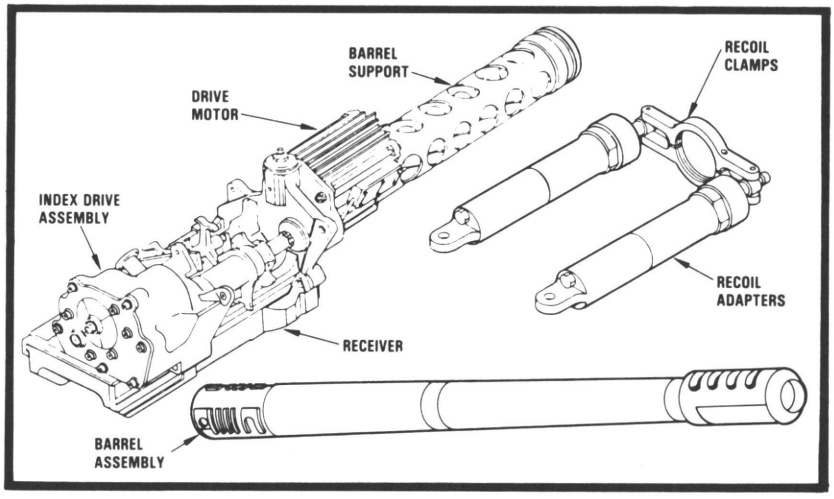

FIGURE 14: Gun components.

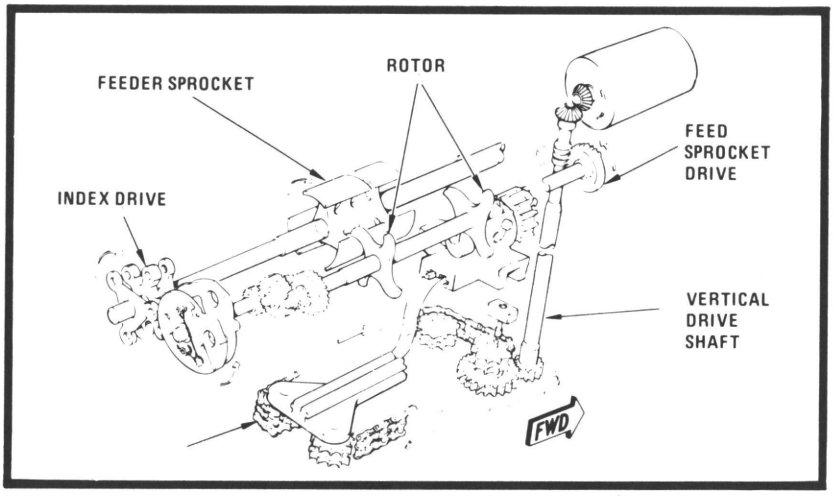

FIGURE 15: Index drive assembly.

the rate of the rounds movement, and places the rounds in the moving carriers (within the carrier drive unit).

During uploading, this process is reversed.

The accelerator/merger receives power through a geartrain from the carrier drive. It is located on the forward end of the magazine.

Carrier Drive Assembly

The carrier drive assembly (figure 13) has several purposes as follows:

- Transfers rounds from the merger assembly into the ammo conveyers or to deliver rounds to the merger assembly during loading.
- Provides drive power for the storage container and accelerator/merger assembly.
- Provides a boost for the ammo conveyer system.
- Provides a mounting point for the electrohydraulic servo valve and the bidirectional hydraulic motor.

The unit is attached to the front of the merger assembly by two lugs and a quick-release pin.

The carrier drive assembly is comprised of an aluminum lightweight housing to which an electrohydraulic servo valve and bidirectional hydraulic motor are attached.

Two quick-disconnect flex lines couple the electrohydraulic servo valve to the aircraft's hydraulic power.

The hydraulic motor drives in the direction and at the rate determined by the round counters/magazine controller.

Ammo Conveyer

The ammo conveyer system moves the 30 mm linkless ammo from the magazine to the gun.

Ammo is moved out of the magazine into the right FAB, passing through the right FAB to the turret and gun. The empty carriers return to the magazine carrier drive in the ammo bay by the left FAB.

The conveyer system consists of a series of attached conveyer elements, FXD and flexible chutes, and two tensioner assemblies, one on each side of the magazine.

The conveyer is driven by the gun transfer unit and the carrier drive assembly.

Gun Components

The major components of the gun (figure 14) are as follows:

Barrel assembly. The barrel is 42 inches in length and weighs 35 pounds. Its life is 10,000 rounds. It is inserted into the receiver, through the barrel support, and turned counterclockwise to lock it into place.

- The barrel support is attached to the front of the receiver; the barrel support supports the barrel at its midpoint.
- Recoil clamps are attached to the front of the barrel support. These provide the front attaching point for the recoil adapters.
- Recoil adapters are attached to the recoil clamps and the turret saddle. The recoil adapters provide recoil absorption during firing.
- A drive motor is attached to the front of the receiver. It provides drive power for gun operations. It is a 3-horsepower motor turning at 11,500 revolutions per minute.
- The receiver is the main frame of the gun. It provides mounting for other

gun components, and mounts the gun within the turret.

Index Drive Assembly

The index drive assembly (figure 15) is attached to the receiver and ensures proper operation of the gun feed/eject system.

The main function of the index drive assembly is to ensure proper operation of the gun feed rotor. The index drive assembly also transfers power from the vertical drive shaft to the feed shaft. It is mounted on the bottom rear of the receiver.

The index drive assembly receives the rounds from the ammo transfer assembly, and with the help of the rotor, places the rounds into the bolt face. At the same time, it removes the spent case and ejects the case overboard. The vertical drive shaft also provides drive power to the chain drive assembly.

Bolt and Carrier Assembly

The bolt and carrier assembly (figure 16) receive power from the electric motor by the vertical drive shaft, through the drive gear. The chain moves around the idler gears in the direction shown.

Attached to the chain is a slider. This slider rides in a channel in the bolt carrier. As the slider moves aft, it pulls the bolt carrier aft. As the slider moves across, the slider moves within the

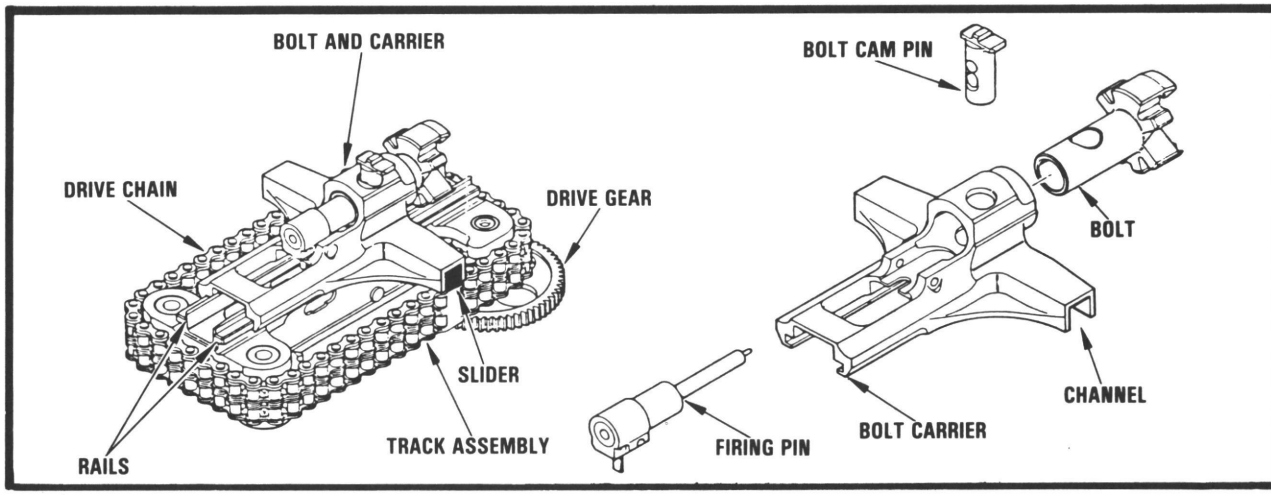

FIGURE 16: Bolt and carrier assembly.

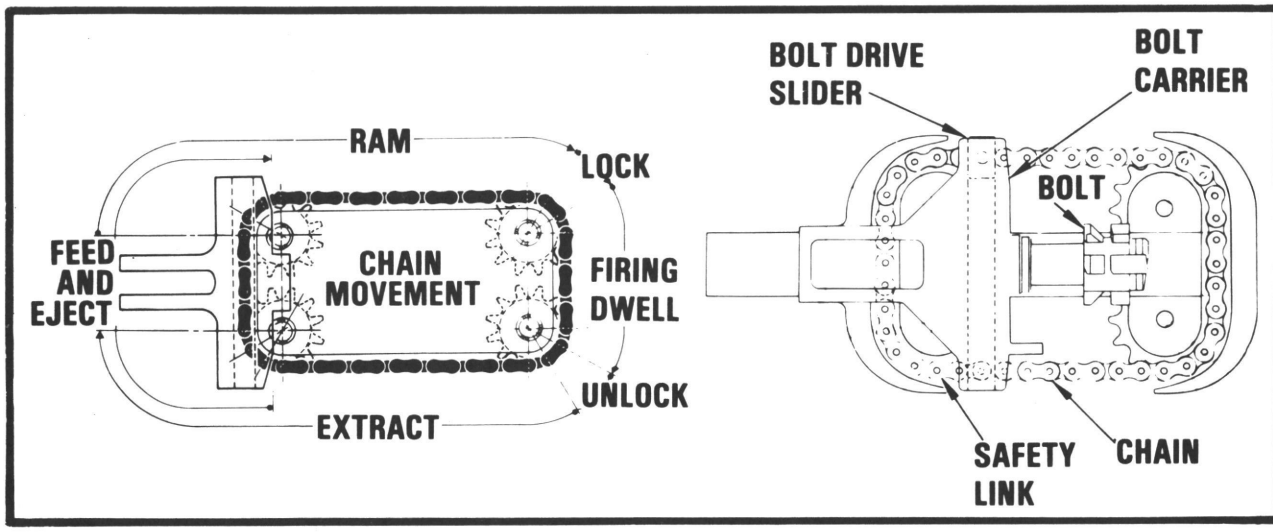

FIGURE 17: Firing cycle.

channel. The bolt carrier remains stationary. As the slider moves forward, it carries the bolt carrier forward. This action of the chain is where the name chain gun originated.

The bolt is carried back and forth by the bolt carrier. The firing pin is within the bolt. The gun operation is controlled by the GCB.

Firing Cycle

Assuming a full magazine, full feed chute, properly timed and indexed weapon, we can follow a round through a full firing cycle (figure 17).

Once reaching the weapon, the round is handed off from the transfer housing to the feed sprocket. The sprocket carries the round to the rotor, and the rotor places the round firmly into the bolt face.

The FXD round and the bolt now move forward into ramming position.

Immediately before full forward position of the bolt carrier, the bolt contacts the face of the barrel. Then, through a cam in the bolt housing, the bolt is forced to rotate, locking the round and bolt firmly in place.

The rotation of the bolt exposes the firing pin tip. Its point makes contact with the round's primer completing the ELEC circuit and igniting the primer.

After the round has fired, the bolt counterrotates and starts moving rearward. The rotor moves one spent case out of the bolt face and introduces another new round. The spent case is now ejected overboard to the right and down from the weapon.

Gun Turret

The gun turret (figure 18) is provided for carrying and positioning the gun in response to crewmember's line-of-sight.

The turret is located on the underside of the fuselage between the crewstations. It is mounted to the fuselage at four points. If the landing gear collapses, the turret is guided into a cavity between the crewstations by four guides that travel within guide rails.

The turret uses utility hydraulic power for operation and is controlled by the TCB through the unlock valve, the azimuth and elevation servo valves, the drive motor, the elevation actuator and the elevation and azimuth resolvers.

The stow spring enables the gun to stow if utility hydraulic power is lost.

The gun slides into the saddle on guide rails, and is secured in place when the recoil adapters are attached to the saddle using quick-disconnect pins. This mounting allows the gun to move within the saddle in response to recoil forces.

AWS Operation

When a crewmember actions the AWS, the bus controller, through the multiplex system, provides the gun enable signal and pointing commands to TCB.

The TCB positions the turret in response to the pointing commands. If the turret position is within 0.5 degrees of the commanded position, the TCB enables the GCB.

When the fire command is received, the GCB will cause the gun to start firing. This action will start to pull on the ammo carriers on the right side of the aircraft, which is sensed by the tensioner assembly.

The rounds counter/magazine controller monitors the tensioners and will cause the hydraulic motor, mounted on the carrier drive, to drive in the direction to equalize the tensioner outputs.

As each round is fired, the GCB, through the TCB, causes the rounds counter to count down one round. This information, rounds remaining, is displayed to the crewmember using the AWS.

When the fire signal is removed, the GCB stops firing the gun. The gun will stop in the open bolt position. As the gun stops, the rounds' counter/magazine controller senses unequal outputs from the tensioners and causes the carrier drive motor to stop.

When the action signal is removed, the TCB positions the turret to the stow position, ±0 degrees azimuth, +11 degrees elevation.

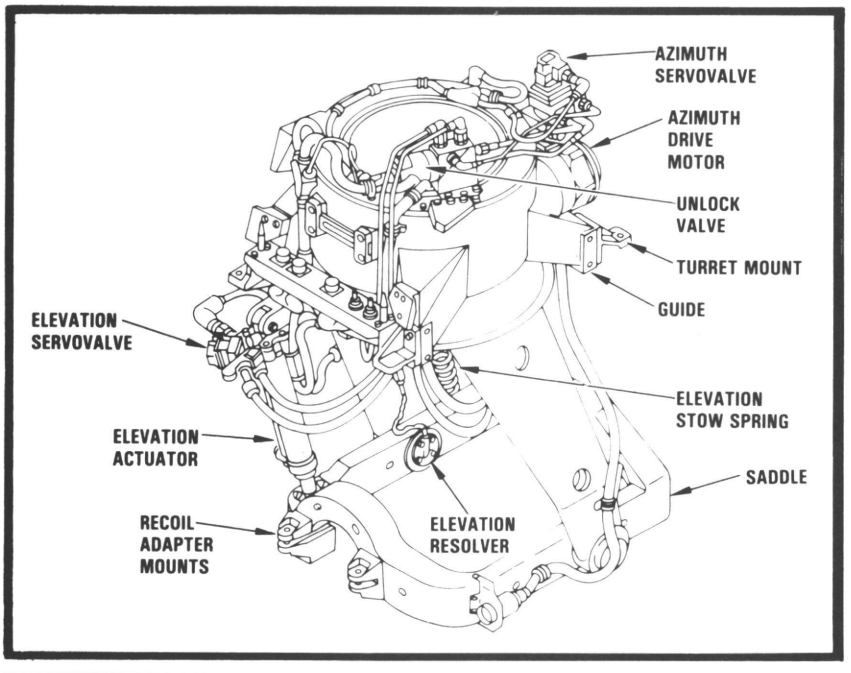

FIGURE 18: Gun target.

AWS Uploading/Downloading

Because of the weight of a fully loaded magazine, uploading a full magazine to replace an empty one is not recommended. To upload the AWS, the feed system is run in reverse and rounds are introduced into the AHS from the gun end of the chuting.

To accomplish this, an uploader/downloader is provided (figure 19).

AWS Messages

If the crewmember actioning the AWS has the GUN switch in the NORM position, the line-of-sight reticle is also the rounds impact point. All the crewmember does is place the reticle on the target and pull the trigger. If the GUN switch is in the FXD position, the cued line-of-sight reticle represents the calculated rounds impact point. Now the crewmember must maneuver the aircraft to place the cued line-of-sight reticle on the target, then pull the trigger.

The article has addressed capabilities and characteristics of the AH-64A Apache weapons system in the subsystem of PTWS and AWS. The next article in the Apache series will address the status of Apache fielding efforts.

AH-64 A TOTAL SYSTEM FOR BATTLE

About The Authors

Mr. John A Moore is responsible for the design, development and presentation of training programs. This includes light helicopter maintenance training as well as Apache maintenance and aircrew training courses.

He has more than 18 years of experience in aviation including instructional systems background in both military aviation and the aerospace industry. He is a helicopter pilot in the Naval Reserve.

Since joining McDonnell Douglas Helicopter Company in 1980, Mr. Moore has held positions in both the Light Helicopter and Product Support Divisions.

Mr. Moore received his Bachelor of Science Degree in accounting from Pennsylvania State University.

Mr. Wendell W. Shivers is responsible for manpower personnel integration implementation for the AH-64 and LHX programs. Since joining McDonnell Douglas Helicopter Company in 1983, he has held positions in Apache aircrew training, LHX integrated logistics support projects and U.S. military marketing.

Mr. Shivers has more than 10 years' experience in Army Aviation. He is rated in the UH-1 Huey and AH-1 Cobra aircraft.

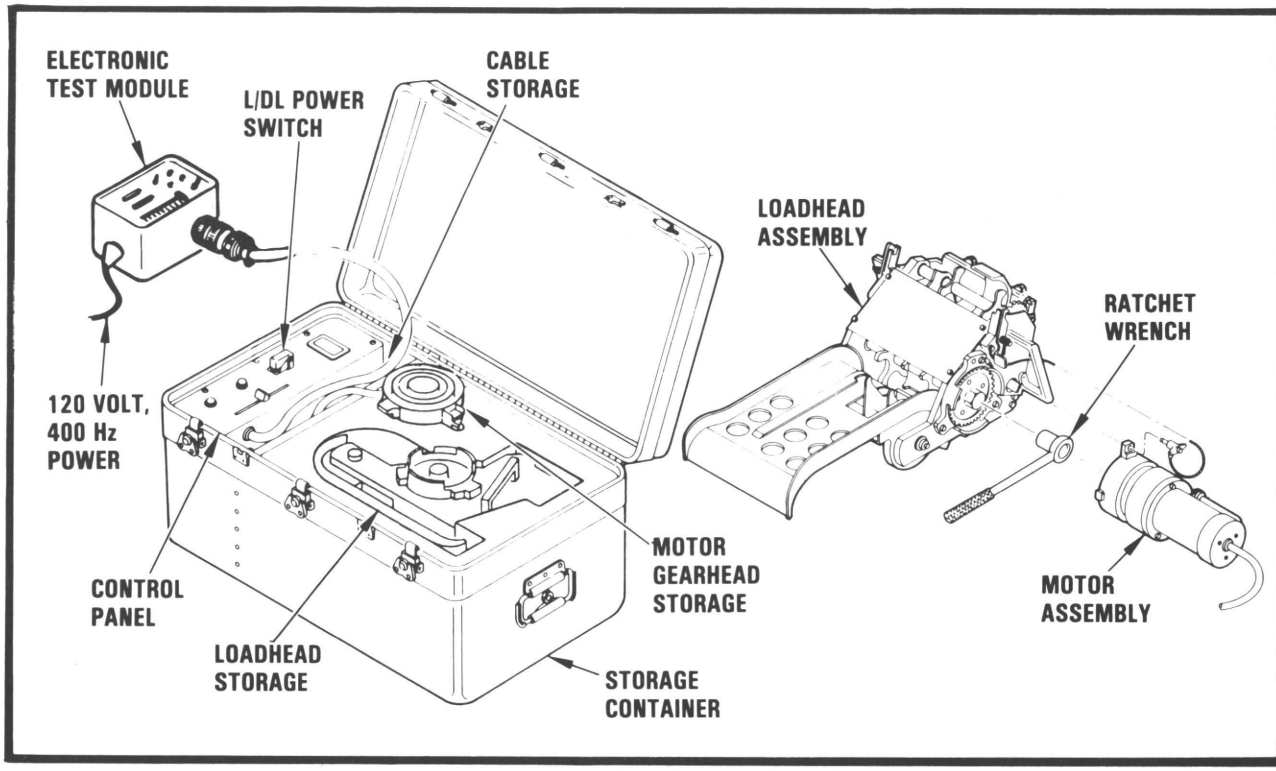

FIGURE 19: Area weapons system uploading/downloading.

Directorate of Evaluation/Standardization

REPORT TO THE FIELD

Aircraft Armament—Everyone's Business

CW3 Phillip W. Malone
Directorate of Evaluation and Standardization
U.S. Army Aviation Center
Fort Rucker, AL

RECENT CHANGES in readiness levels of aircraft armament systems have become a main concern for Department of the Army in 1988.

As operators, how many times have we heard this statement, "We're going to the range in 2 weeks, so let's run up the aircraft and do a full armament systems check"? This check is usually done to give the armament shop time to fix any discrepancies. Often aircraft have something wrong with them that require armament shop repair before the aircraft go to the range. A delay in the repair may occur because of the need to order parts. Coupled with other aircraft maintenance problems, training can be adversely affected by this delay.

This method of preparing for range firing is not conducive to good management or maintenance procedures. Armament system checks and maintenance should be conducted on a continuous basis whether the system is being fired or not. In the long run, armament maintenance workload should be reduced since the armament systems are constantly being used. These checks identify problems in a timely manner, which allows the unit to take corrective action at the time the system is broken not later when the system is needed. It also reduces crisis management, thereby improving workflow at a time when it is needed to be the most efficient.

As the time to fire approaches, we must have operable systems to support our range requirements, allowing all pilots a chance to fire the proper tables. Last-minute problems can make it difficult to meet training requirements.

Readiness of weapons systems also directly reflects on the unit's ability to perform its wartime mission. Let's face it—we must be prepared for any type of conflict at any time. For this reason, these weapons systems must be maintained in the highest state of readiness at all times. This level of preparation is essential to ensuring Army Aviation and the Army remains a viable deterrent.

To reinforce our readiness capability, some positive steps have been taken at the Aviation Center. The Directorate of Evaluation and Standardization (DES) now evaluates aircraft armament systems during its worldwide visits. DES identifies problem areas pertaining to armament system operations and maintenance procedures. Through these evaluations, commanders are able to reevaluate and adjust their programs to ensure their weapons systems are ready to fight.

To improve the reliability of armament systems, the AH-1 Cobra operator's manual and checklist have been changed to include a full armament systems check during run-up, instead of simply on an "as required" basis. AH-64 Apache manuals are currently being reviewed to adopt the same measures. These manuals and checklists will mandate continuous checks as a matter of habit.

The next time your unit does battle drills, plan for a little extra time for weapons systems checks. Then write-up the discrepancies noted. The armament shop cannot fix what they don't know to fix. You, the operators, are in the best position to accurately determine if systems are functioning properly. Remember, a weapon system could save your life one day. Stop by the armament shop to make sure they understand your write-up and answer any question they may have about the faulty operation you encountered so they may repair it quickly.

Rest assured, the Army Aviation Center will continue to ensure the ground commander's most effective combat multiplier is onstation and ready to fight. Involving the entire chain of command is a must to ensure readiness of armament systems.

We cannot stress enough the importance of cohesion between operators and maintenance personnel in identifying malfunctioning systems and repairing them quickly to keep our fighting force number one.

DES welcomes your inquiries and requests to focus attention on an area of major importance. Write to us at: Commander, U.S. Army Aviation Center, ATTN: ATZQ-ES, F. Rucker, AL 36362-5208; or call us at AUTOVON 558-3504 or Commercial 205-255-3504. After duty hours call Ft. Rucker Hotline, AUTOVON 558-6487 or Commercial 205-255-6487 and leave a message.

AVIATION PERSONNEL NOTES

Temporary Flying Duty Clearances

The commander, U.S. Army Aeromedical Center (USAAMC), Ft. Rucker, AL, has initiated a change in aeromedical waiver policy that has a major impact at aviation unit level. In the past, local flight surgeons had a very limited authority to recommend return to flying or air traffic control duties for aircrewmembers with disqualifying but potentially waiverable conditions. A revised Aeromedical Center policy letter, published 1 September 1987, delegates to local flight surgeons the authority to recommend a temporary waiver for all conditions except those that are generally not waiverable. The final medical recommendation still rests with the USAAMC commander. *The Total Army Personnel Agency (TAPA) is still the final waiver authority.* Aircrewmembers and commanders must understand that either of those authorities may possibly reverse the local decision, based on further review of the medical condition or the needs of the Army. Flight surgeons are being cautioned also against abuse of this new authority, and unit commanders must not exert improper command influence on aeromedical recommendations. Overall, this policy change is expected to enhance mission capability significantly with no impact on flight safety.

The conditions that generally are not waiverable are as follows:

- Alcoholism (as defined in Army Regulation (AR) 40-501, paragraph 4-24h).
- Arteriosclerotic vascular disease.
- Cancer (except a single episode of basal cell carcinoma).
- Cardio vascular accident and other significant central nervous system disorders (stroke).
- Loss of consciousness (unexplained).
- Medically disqualified. Those who have been medically disqualified from aviation service (orders from Department of the Army (DA) TAPA); i.e., pregnancy.
- Myocardial infarction (heart attack).
- Other conditions that obviously impair personal safety, safe flight or mission completion.
- Seizure disorder.
- Significant visual disturbances to include acuity uncorrectable to 20/20 or impaired depth perception.
- Skull fracture or other significant head trauma.
- Substance abuse.

Aviators with medically disqualifying conditions not listed above may be returned to temporary flying duty by the local flight surgeon and unit commander as long as the medical condition will not compromise personal health, aviation safety or mission completion.

Scholarship Program

Each year, the George and Carol Olmstead Foundation awards scholarships to three outstanding Army officers--two U.S. Military Academy graduates and one officer commissioned from another source. Historically, the application and selection process begins in August of each year and lasts a year.

Olmsted scholars spend 9 to 12 months at the Defense Language Institute in Monterey, CA, and then go abroad for 2 years to study in the fields of social and political science or international relations. Overseas study will be followed with 1 year at a university in the United States, earning a master's

degree. (The year of study in the United States does not have to come right after the overseas period.) To be eligible for one of these scholarships, an officer must:

- Be Regular Army.
- Be branch qualified.
- Have between 3 and 7 years of commissioned service.
- Have a minimum graduate record examination score of 1,200, or have an undergraduate grade average of B+ or higher.
- Be in compliance with AR 600-9, "The Army Weight Control Program."

An Army selection board chooses seven finalists from which an Olmsted Foundation committee chooses the three recipients. Officers desiring to be nominated should contact their career managers. Further information is available from Linda Hakenson, AUTOVON 221-3140 or Commercial 202-325-3140.

Shortage of NCO Logistics Program Soldiers in Career Management Field 67

As of February 1988 the Aviation Branch was operating at 39 percent of NCO Logistics Program (NCOLP) authorized strength. The NCOLP positions, identified by the special qualification identifier (SQI) K, are designed to provide expert people to perform Army logistics management functions, worldwide. In the near future, the number of SQI K positions are also expected to increase as they are documented in newly forming aviation brigades and battalions.

To correct this situation the proponent office at the U.S. Army Aviation Logistics School, Ft. Eustis, VA, has requested and expects NCOLP schooling to be opened to sergeants first class in military occupational specialty (MOS) 67R, 67T, 67U and 67Y. Previously, only MOS 67Z soldiers were allowed to apply for the program (according to AR 614-200, paragraph 17-7).

Considering the above developments, any units having logistics-oriented positions should consider adding SQI K to the position identifier. Likewise, those holding an SQI K position who have not attended the 9-week NCOLP course at Ft. Lee, VA, should do so. When applying, those holding the position with other than MOS 67Z should request a waiver of MOS on DA Form 4187. Application procedures and prerequisites can be found in AR 614-200, chapter 7. Soldiers should note that all other prerequisites must be met before requesting the waiver.

Nonavailability of Videotapes

The videotapes referenced in the February 1988 *Aviation Digest* article "For ASOs Only" are not available. Because of technical problems and marginal video quality, videotapes 2B-011-1355-B and 2B-011-1356-B, Dynamics of Aircrew Communication Coordination, Parts 1 and 2 are not releasable. Any requests received will be returned without action. We regret any inconvenience this may have caused. Points of contact are Ms. Jane Preston or Mr. Glenn Pate, AUTOVON 588-2116/2620/2291.

Captain Randall N. Briggs
Captain Briggs was assigned to the Aviation Officer Advanced Course 86-5, U.S. Army Aviation Center, Fort Rucker, AL, when he wrote this article. He is presently assigned to the HHC, 17th Aviation Brigade, APO San Francisco.

FOCUS on training

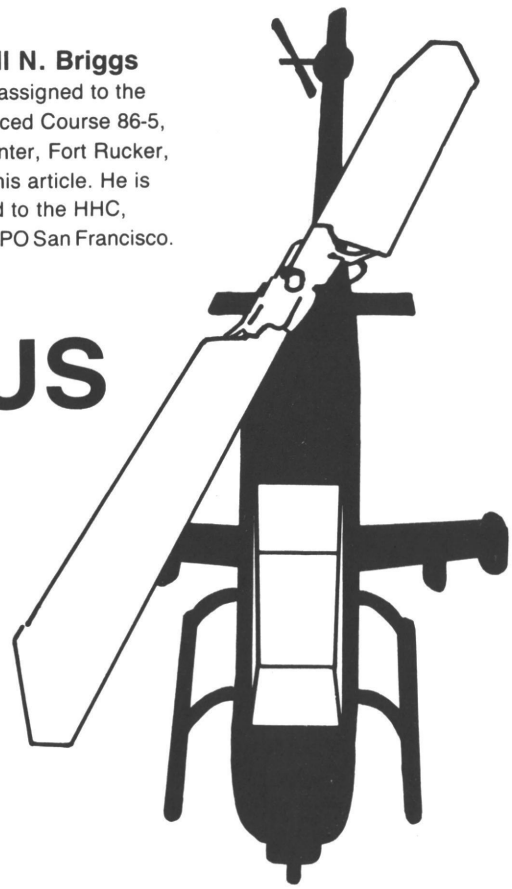

AN OLD TRAINING poster back in the 1970s, or probably earlier, showed a ghostly soldier emerging from a cemetery full of white crosses. The caption was a haunting warning: "Let no man's soul cry out, 'Had I the proper training....' " For professional soldiers to examine the state of their training and combat readiness is always appropriate. In Army Aviation we, as the newest combat arm, have a particular responsibility to ensure that our soldiers and units are ready to go to war on a moment's notice and win. Therefore, we might do well to consider that old poster and ask ourselves if we are providing our aircrewmembers the proper preparation for combat.

Our training standards are generally high. However, there *are* some areas in which, by shifting our priorities slightly, we could do a better job within our resource constraints. We must ensure that we get the maximum combat payoff for each training dollar. Examples of improvements we can make are focus training on combat tasks, ensure leaders' technical and tactical competence and emphasize the combat role of aviation commanders. These improvements are discussed in the paragraphs below.

Focus training on combat tasks. On tomorrow's battlefield the U.S. Army aviator will face the most demanding missions in aviation history. In Europe, he may conduct operations day and night in a contaminated environment against the most hostile antiair threat ever seen. In Southwest Asia, he may operate with extremely austere logistical support; few navigational aids or terrain recognition features; and in a high, dusty environment that demands the utmost from men and machines. In Central America, he may face a shadowy guerrilla enemy, cope with fearsome heat and humidity, and navigate across a *featureless* jungle canopy.

Our peacetime aviation training must focus on the skills needed to survive and win in these harsh situations. Combat results from Grenada indicate that we do not always succeed in this. Air assault security, strip alert procedures, and crew coordination and communication are some of the areas in which shortcomings were revealed.

One way to increase training resources available for combat-essential tasks is to reduce the requirements for other training. For example, we could eliminate the instrument currency requirements for aeroscout and attack pilots. Neither the OH-58 Kiowa nor the AH-1 Cobra are instrument certified, nor do they have compatible instrument simulators. Thus, time spent keeping our pilots of the above aircraft proficient in instrument flight rules procedures has little payoff in combat as our "Victor Airways" system will not exist in a combat zone. What we could emphasize instead is recovery from inadvertent instrument meteorological conditions (which are challenging enough as they are) and train in tactical airspace management procedures. The flying hours and simulator expense saved by this currency in instruments could be devoted to more terrain-flight navigation skills. If we can only do so many things well, it makes sense to do well those things that will enable us to win in combat.

Along with eliminating or reducing our noncombat essential training, we must ensure that we realistically train in the tasks and maneuvers that are required. This means that we must be thoroughly familiar with the entire performance envelope of our aircraft. Otherwise, we may find ourselves like the U.S. Air Force pilots who were reluctant to use afterburner over Vietnam because they had trained under

peacetime policies restricting supersonic flight. Unfortunately, we have recently been moving in the direction of more restrictions and less realism. While this probably will reduce our peacetime accident rate, the combat payoff may be aviators unfamiliar with what their aircraft truly can and cannot do.

Ensure leaders' technical and tactical competence. After flight school, commissioned officers are widely perceived to be held to a lower standard of pilot skills than warrant officers. Unfortunately, in some cases this is probably true, which is because commissioned officers are expected to be leaders not technical experts. Yet a crucial ingredient in effective leadership is credibility, and every unskilled commissioned aviator out in the field, by reinforcing this negative perception, damages the credibility of all his peers. Also, commissioned aviators are not expected to be tactical experts; rather, they are supposed to focus on resource management.

To correct the problem of technical deficiencies is relatively easy. We must insist that our commissioned officers are competent pilots as a prerequisite to success within the Aviation Branch. If every officer evaluation report at least mentioned the pilot skills of the rated officer, soon it would be important to know how to fly.

Lack of tactical proficiency is a problem more difficult to solve. It involves two aspects—proficiency in fighting aviation units and understanding of the combined arms team. The U.S. Army Aviation Center, Ft. Rucker, AL, has aggressively tackled the combined arms issue in its courses of academic instruction. Indeed, the Aviation Officer Advanced Course (AVOAC) is arguably the most combined-arms oriented of any officer advanced course. The excellent record of AVOAC graduates at the Combined Arms and Services Staff School reflects this orientation. Still left unaccomplished, however, is the process of molding our lieutenants and captains into tactical *aviation* experts.

Considering the wide range of our types of units, aircraft and missions, this might be impossible within the confines of a general course of instruction. A solution might be short, intensive modules of instructions separate from the basic or advanced course. These aircraft, unit-specified modules, should prepare the commissioned aviator to lead and fight the particular type of unit to which he will be assigned. An alternate method would be to establish separate tracks within the general courses, similar to the armor and cavalry tracks at the Armor Center. Either of these plans, of course, could impose still more burdens on the Aviation Center, especially if they included actual in-flight training. The payoff, however, in terms of quality leaders sent to the field would be worth it.

Emphasize the combat role of aviation commanders. For a long time little or no doctrine has existed on how the aviation commander actually leads his unit on the battlefield. With Aviation Branch implementation, and the publication of the new Field Manual 1-100, "Combat Aviation Operations," a doctrine of leadership is emerging. We must capitalize on this trend and reinforce it. As an armor battalion commander leads from his tank, so should tactical aviation commanders lead from their aircraft. We must identify the type of aircraft the commander should fly and where he should be on the battlefield. At the same time we need to resolve some related issues, such as location of staff, and who takes control when the commander returns to the forward arming and refueling point.

As the doctrine, equipment and training within our branch continue to develop and progress, we must not lose sight of a harsh reality. We may have to go to war tomorrow with the men and machines we have on hand today. If so, the quality of our soldiers and the ability of our leaders will make a greater difference than the technology of our aircraft. The only way to ensure that we are ready to meet this challenge is tough, realistic training that challenges our aviators and develops our leaders. In many cases, we are conducting such training right now. With a slight shift in emphasis, we can do even better by focusing our training on combat tasks, ensuring the competence of our leaders and emphasizing the combat role of our commanders on the battlefield.

Keeping OH-58 and AH-1 pilots proficient in IFR procedures has little payoff in combat; therefore, time and money could be focused on other areas such as training in tactical airspace management procedures and terrain flight navigation skills.

IN 1982, CARGO Branch, Department of Graduate Flight Training, recently redesignated C Company, 1st Battalion, 223d Aviation Regiment, Aviation Training Brigade, and the U.S. Army Safety Center, both at Ft. Rucker, AL, took a look at standardization and training programs for CH-47 Chinook enlisted crewmembers. They saw a critical need for a formalized worldwide standardization program for the flight engineer and crewchief. Besides formalizing and standardizing the training, a need existed to make the enlisted crewmembers more aware of their aviation environment. This awareness would include: flight regulations, aviation life support equipment, safety and reporting, hearing conservation, special mission operations, tactical mission operations and threat, to name a few. Late in 1983, formalized training was developed to provide a program that would put a stop to the evergrowing number of accidents caused by a deficiency in CH-47 enlisted crewmember training.

The development and fielding of the D model Chinook, medium lift helicopter, have brought into focus the requirement for standardization of flight engineers and crewchiefs. The CH-47D, with its increased mission capabilities and greater demands on flight crews, called for implementing the U.S. Army's first formalized Flight Engineer Instructor Training Course. This course should meet the needs of the Active Army as well as its Reserve Component.

An institutional program of instruction was developed that would provide the field the trainers (flight engineer instructors) needed to perform mission training, monitor continuation training, and evaluate and administer programs as required by the proposed aircrew training manual (ATM).

Let's look at some of the history in developing these courses. In the past, during the introduction of the CH-47A model, a maintenance-trained soldier performed the duties of the flight engineer. The flight engineer would have an assistant, a crewchief, to assist with most of the operator maintenance. The crewchief's sole function was to perform as a flying mechanic and included tasks, for the most part, of servicing aircraft systems and making small component changes. Maintenance manuals for that

Illustration by Paul Fretts.

model of aircraft stipulated the guidelines or standards by which these maintenance functions were to be performed.

During the Vietnam era, it became evident that, if the CH-47 were going to perform its mission effectively, the flight engineer and crewchief were going to have to take on additional tasks. The responsibility for internal and external loading, briefing and safety of passengers, as well as doorgunner functions, would be included in crewmember tasks.

Over the years, mission requirements have become more complicated and aircraft systems more sophisticated. As this occurred, it became evident to most CH-47 units that, if the mission were to be accomplished, enlisted crewmembers had to take on a greater task load. Procedures *had* to be set up to ensure aircrew coordination between pilots and enlisted crew occurred during all phases of preflight and flight.

To accomplish this, each CH-47 unit set up its own crewmember standardization program. Normally, no two CH-47 units' procedures were exactly the same. Generally, all the units set up their programs by allowing experienced flight engineers to perform on-the-job training on less qualified crewchiefs. The crew duties, and the standards by which these duties were measured, have left a lot to be desired. What it really boiled down to was a crewchief taught by a bad flight engineer became just as bad. The standards by which the enlisted crewmembers performed crew duties deviated from one CH-47 unit to another. If a CH-47 unit conducted operations in another location and environment with a counterpart CH-47 unit, an increased risk could occur as far as the safety of personnel and equipment; miscommunication was the norm not the exception.

FLIGHT ENGINEER INSTRUCTORS FOR CH-47s

Major Gary T. Greening
Aviation Training Brigade
U.S. Army Aviation Center
Fort Rucker, AL

Over the years, CH-47 units have appointed standardization noncommissioned officers (NCOs) to coordinate and implement their unit's standardization program. This vital position training has never been formalized. It has often appeared and disappeared as commanders changed. This standardization NCO position was and still is a viable position. All aviation levels greatly emphasize standardization. Yet a void has prevented the standardization program and the enlisted crewmember duties from coming together. As the average rank and experience level of CH-47 enlisted crewmembers declined, the accident rate increased.

Considerably more than 50 percent of the CH-47 mishaps have been attributed to crewmember mistakes in maintenance or inexperience in the particular mission the crewmembers were involved in at the time of the accident. It makes sense that crewmembers involved in loading and unloading cargo hooks, passengers or internal loads must know how to go about their business safely to ensure the safe operation of their aircraft and fellow crewmembers.

The first CH-47D Flight Engineer Instructor Course began on 2 March 1986, and its students graduated on 14 April 1986. The CH-47D Flight Engineer Instructor Course is in its youth. It should broaden the flight engineer's role in CH-47 aviation units. The flight engineer will be multifunctional, capable of performing any mission and instructing those less qualified in both flight and academic subjects. Graduates also will be able to set up and evaluate enlisted crewmember training programs according to the ATM.

The ultimate goal is to provide the institutional training required to standardize the training of flight engineers and flight engineer instructors. This training will give the field the ATM as guidance for a standardization program. Most important, it will provide a qualification identifier that will allow the U.S. Total Army Personnel Agency and unit commands to place the right soldier in the right job. We must get there quickly if we are to put a stop to the millions of dollars in equipment loss and the needless loss of lives. This new course for our CH-47 flying crewmembers will add momentum to our enlisted Aviation Branch. It will give the Aviation Branch the ability to achieve the highest standards of excellence under the safest of conditions.

VIEWS FROM READERS

Editor:

In your printing of my article, "High Altitude, High Danger," in the October 1987 issue, a small error was made in the printing. In the last column on page 9, the last sentence reads: "Thirst comes into play at 2-3 percent dehydration..."; this *SHOULD READ*..."5-10 percent...."

This is not a dangerous mistake but as printed it is inaccurate. Please make this correction so that I am not hounded by people for being in error.

MAJ Alan Moloff
U.S. Army Medical Student Det
Academy of the Health Sciences
Ft. Sam Houston, TX

Editor's Note: Technical review of the article before publication stated: "Thirst comes into play at 2 to 3 percent dehydration but is not a good indicator of dehydration because one tends to underdrink and remain less than properly hydrated." The author's original statement was that ... "the average person will not feel thirsty until he is dehydrated by 10 percent."

Editor:

Please let me congratulate you on the November 1987 issue of *Aviation Digest*, which has just arrived here in the ROK. It contained two excellent articles, "Aggressor Helicopter Training Unit," by CPT Greg R. Hampton, and "Sustainment of the Combat Aviation Brigade," by LTC Stuart W. Gerald. This is a real rarity, and is greatly appreciated by all Army aviators.

CPT Hampton's article...opens a discussion which is long overdue. Too many times in large-scale collective training Army helicopters merely fly above the exercise, pilots unsure if and when they have been engaged by ground units, ground troops firing blanks at every helicopter they see. This produces nothing but ill will and frustration on the part of aviators and ground troops alike. Field expedient methods to denote friendly and enemy aircraft, such as the tiny colored panels placed in helicopters' windows for major exercises like Team Spirit here in Korea, are unsatisfactory. Tactics and procedures are unrealistic and, as CPT Hampton points out, if we learn anything at all it is how to defeat ourselves. Please allow me one minor nitpick. Figure 1 on page 3 is incorrect. In the South Korean entry, the UH-1H, the second most numerous helicopter in the inventory, is not listed, while the AH-1S, a helicopter the South Koreans do not possess, is. The ROK is planning to acquire the AH-1S in the near future, but right now the only Cobras in the inventory are a handful of AH-1Js (which are not mentioned in the chart). Along the same lines, the U.S. section fails to list the AH-1S (or the AH-1P, E and F, as we are calling them these days). Maybe somebody should have taken a last look at that chart before the magazine went to press. The sad thing about CPT Hampton's article is that the need is so obvious, but that most likely nothing will be done about it in the foreseeable future. Maybe we'll have an aggressor training unit by the time LHX is fielded, but I'll not hold my breath waiting for either event.

LTC Gerald's article is similarly timely and well-written. Finally, we are allowed to see in print what many have felt for years: that the AOE restructuring has caused at least as many problems for aviation as it has solved. While my own objections to our aviation force structure center on different issues than the ones LTC Gerald raises, one can quickly see that his criticism is right on the mark. We have stripped ourselves bare of sustaining capability in the name of preserving combat units (never mind that aviation combat units under AOE are only one-third the strength of similar units

in the bad old "Army of Mediocrity"). Finally, someone has pointed out that the emperor may not have such wonderful new clothes after all. What is most disturbing about this issue is that only now, after AOE has been "set in cement" can we have a serious debate of its pros and cons in our professional journal. For years all we have gotten is "happy talk" about AOE in the pages of *Aviation Digest*.

Very much along the lines of happy talk, we have been subjected over the past several years to one article after another about the AH-64, its systems, simulators, pilots, tactics, ad nauseam. While I do not doubt that the Apache is the finest attack helicopter in the world, we have not really, either in the Army or within the pages of *Aviation Digest*, conducted a realistic assessment of its virtues and vices. What we have failed to discuss is the artificial environment that the entire Apache fielding program has enjoyed. All the early units to field the AH-64 enjoyed the luxury of excess personnel and equipment, far beyond TOE authorizations, while they were "proving" the system. Brand-new aircraft were cannibalized for spare parts, becoming instant "hangar queens," while the finest attack helicopter pilots in the Army were assigned to these units. The result is that we now do not know what problems the Apache may eventually encounter out in the field, for we have successfully masked any problems that the initial fielding process might have revealed.

Back to the good things you are doing. I have noticed a slightly increased emphasis on tactical flying and warfighting...in your recent issues. CW4 Robert J. Rendzio's article on "Human Frailty," in the November 1987 issue is yet another good example of this. Please keep it up.

CPT Randall N. Briggs
HHC, 17th Aviation Brigade
APO San Francisco

Editor:

I read with great interest the November 1987 *Aviation Digest* article, "Aggressor Helicopter Training Unit," by CPT Greg Hampton. Having been involved in the discussion of this issue several years ago at the Aviation Center, I found it significant that the concept for employment for such a unit has not been clearly articulated. Specifically, the training objective has not been identified in CPT Hampton's discussion and therein lies the fallacy of such a program.

There are two potential foci for this program that must be addressed in detail before we can reasonably discuss equipment, organization, personnel and cost. The first focus must be training value for the "blue" ground element. If the intent is to train the ground soldier, then simpler methods are available. The ground soldier needs only a target identifiable as a "threat." The only other element is threat flight tactics to ensure that targets are presented properly (i.e., aircraft in pairs, flying race tracks, etc.). Both of these requirements are easily met by additional training of aviation units.

The second focus is more complex and, parochially speaking, more important to me as an aviator. That is the issue of presenting an aerial threat force for "blue" aviation to work against. The viability of such a program depends entirely on the willingness to develop and train with a viable air-to-air program. Given the examples of Navy and Air Force aggressor units that CPT Hampton cites, I can only assume that this is the real focus of his article.

The point is that the Army has been accused too often of fielding equipment and units without a sound concept for employment. Are we willing to let Army aviators test pilot and aircraft limits in the demanding role of air-to-air training? If not, let's not prematurely undercut our capped manpower levels and constrained budget to field a new aggressor force.

MAJ Edwin F. Viega
4/11 Armored Cavalry Regiment
APO New York

Readers can obtain copies of material printed in any issue by writing to:
Editor, U.S. Army Aviation Digest, *P.O. Box 699, Ft. Rucker, AL 36362-5042.*

MONTHLY WRITING AWARD

THREAT

Captain Johnnie A. Ham
Captain Ham was assigned to the U.S. Army Student Detachment, with duty at Georgia Tech, Atlanta, GA, when he wrote this article.

Who's in That Other Cockpit?

FREQUENTLY I would sit behind my desk with a model of an Mi-24 Hind and an AH-1S Cobra, of course with the door closed, and fly the two aircraft through a myriad of aerial combat maneuvers that always resulted in total annihilation of Red aircraft. I often wondered what the result would be if the Soviet pilot and I depended solely on flight skills to win. This fantasy would cause me to focus in on the cockpit of that model Hind on my desk but, alas, no pilot. What is he really like in the real world? Does he worry about the motor pool? What's his offduty time like? Does he ever get any leave? How is he treated in his society? What is his "initial entry rotary wing" training like? Does he worry about his officer evaluation report (OER)? These questions and more will be answered in the next few paragraphs.

This article addresses the schooling, flight training, career and lifestyle of the Soviet combat helicopter pilot. Generally, it can be stated that the entry process is highly selective, the training is intense and it produces an extremely effective officer-aviator.[1]

The military indoctrination received during a Soviet youth's childhood is the first step toward his becoming an officer. He receives at least 2 years of mandatory military training in high school. This training is supplemented by membership in a number of paramilitary voluntary youth organizations that could begin as early as 7 years of age. A large number of future military pilots receive their initial flight training with DOSASF (Voluntary Society for Assistance to the Army, Air Force and Navy). This youth organization offers, among other flight training, helicopter training in the Mi-1, Mi-2, even the Mi-4. Thus, even before formal military service, most have had some military experience.

Helicopter pilots receive their training in one of two Air Force schools operated to train helicopter pilots. (The Soviet Army does not train pilots.) These two schools are the Saratov Higher Military Aviation School and the Syzran Higher Aviation School. Both are 4-year "colleges" that produce officer pilots.[2] (Note: In 1975, the Syzran school dropped the "higher" program for a 2-year program training warrant officers as pilots. This was part of an experiment throughout the Soviet armed forces to upgrade the status of the senior noncommissioned officer (NCO) rank. Graduates incurred a 5-year obligation. The program, however, was abandoned in 1978 and a 4-year program was reinstituted with graduates commissioned as lieutenants.)[3]

Entrance to one of these schools is based on academic achievement, political reliability and competitive examinations. Needless to say, competition is tough. As an example, Viktor Belenko (the Soviet pilot who defected in 1976 to Japan with his MiG-25) was one of a group of 360 applicants who was selected from a pool of 4,000 hopeful applicants who reported for duty.[4]

Once admitted, the future helicopter pilot has a long way to go. He begins with a 2-month "basic training course" conducted during the summer. Once he completes it he is ready to begin academic classes. The majority of his academic work occurs from September to April. Cadets attend lectures and seminars; do research papers; and participate in scientific, military, technical and political groups. An average year contains 950 hours of academic instruction and 300 hours of drills conducted 6 days a week. More than 50 subjects studied include the courses below. Needless to say, the academic load is difficult.

Higher mathematics; military education and psychology; aircraft and engine design; geometry; theoretical mechanics; radio engineering; principles of scientific-communism; probability theory; physics; chemistry; air force tactics; aerodynamics; and political economy.

Flight training begins in April of the cadet's second year and continues yearly from April to September. The training includes intensive ground and flight training, as well as periodic tours to military units. Flight training progresses from the Hoplite to the Hound to the Hip. Nearly one-third of the cadets "wash out" during this phase because of medical or flight deficiencies. The cadet receives 200 to 250 hours during the 3 years of flight training.[5]

While attending the college, the cadet receives a number of benefits. These include good food, free quarters and uniforms, and a monthly allowance of 15 rubles ($20). The cadet also receives travel vouchers on Aeroflot. Since students do receive weekend passes, leave and most official holidays off, the cadets can go anywhere in the Soviet Union for a few rubles.[6,7]

Upon graduation, the cadet receives a commission as a lieutenant (senior to a junior lieutenant—more like a U.S. first lieutenant). He receives a baccalaureate degree in engineering or research and incurs a 25-year active duty

the Soviet Helicopter Pilot

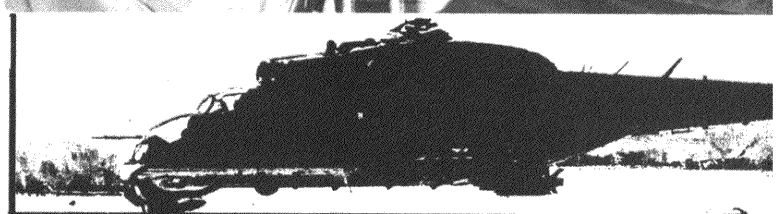

[1]Jeff Bauer, "What Are 'They' Doing Now?" *Combat Crew*, January 1983, p. 4.

[2]Paul J. Murphy, editor. *The Soviet Air Forces* (New York: McFarland and Co., Inc, 1984), p. 122.

[3]Stephen Dalziel, "Soviet Helicopter Pilot Training," *Defense Helicopter World* (September-November 1985), p. 29.

[4]John Barron, *MiG Pilot* (New York: Avon Books, 1980), p. 62.

[5]Edward J. Bavaro, "Soviet Pilots, How Do They Measure Up?" *Aviation Digest* (August 1983), p. 33.

[6]U.S. Air Force, "Soviet Aerospace Handbook," AF Pam 200-21 (Washington: U.S. Government Printing Office, May 1978), p. 153.

[7]Bauer, p. 5.

commitment. He becomes a member of a very exalted and elite class, which I will discuss later.[8]

Riding high on the laurels of military achievement, the new lieutenant arrives at his first combat unit "officially" considered combat ready. In reality, the unit is where the aviator acquires his combat skills. Transitions are a unit responsibility, and will generally take 5 to 6 months. The new aviator's first task beyond his transition is attaining the rating of a third class pilot. He is also introduced to the less glamorous side of the military with a number of additional duties. Sound familiar? [9]

Flight training in the unit is conducted 10 months out of the year. During this time, the average helicopter pilot can expect to fly 80 to 100 hours in his aircraft as well as training in the flight simulator. He is required to take an annual flight evaluation and pass a written examination on knowledge of equipment, weapons and tactics.[10] One of the reasons for the lack of flight time is the fatigue life of the aircraft. For example, the Mi-24 is limited to a 600-hour fatigue life, compared to the multithousand hour operational life of U.S. Army helicopters. (Mark one up for our designers!) [11]

Mr. Edward J. Bavaro's article, "Soviet Pilots, How Do They Measure Up?," published in the August 1983 issue of *Aviation Digest*, presents an excellent analysis of the capabilities of the Soviet versus the U.S. Army helicopter pilot. At figure 1 is a synopsis of his findings. One interesting finding is with the "maintainers" of Soviet helicopters. The retention rate of enlisted aviation personnel is very poor. Less than 2 percent reenlist.[12] (Perhaps an indication of the living conditions of enlisted soldiers.) Thus, the backbone of Soviet aircraft maintenance falls to the junior officers who are educated technicians.[13]

Yes, the Soviet helicopter pilot does, in fact, receive an "OER." However, he does not receive the OER as often as his U.S. counterpart. It is prepared only when the officer is eligible for promotion. The report is written in essay form without a specific format. The OER is an evaluation of his performance, participation in Communist Party activities and potential as evaluated by his immediate supervisor.[14]

The promotion is based on time in grade and position. Promotions are accelerated for the officer-aviator as shown at figure 2. But there is no guarantee of promotion. Theoretically, a pilot could serve his entire obligation as a lieutenant.[15] To be a successful and promotable officer, the pilot needs basically two "tickets." First, he needs to be a member of the Communist Party. Though only 6 percent of the general population is admitted to the Party, more than 90 percent of the officer corps are members.[16] The second ticket is to graduate from one of two higher Air Force academies—the Gagarin and Zhukovshiy Air Force academies. These 4-year schools prepare the officer for regimental-level staff positions and for command positions.[17]

The benefits and lifestyle accorded to the Soviet helicopter pilot set him above the vast majority of Soviet citizens. His pay is based on rank, longevity, position and special qualifications. Additional pay is given for special knowledge and skills, academic degrees, remote duty and overseas duty. Pilots also receive flight and hazardous duty pay. For the new helicopter pilot, this amounts to more than 300 rubles monthly, as compared to the average salary

Figure 1: U.S./Soviet helicopter pilot comparisons.

Characteristic	Advantage	Remarks
Flight school graduates	U.S.	Competency
Unit Level Training (Flight hours, exercises)	U.S.	
Pilot retention	USSR	
Enlisted aviation retention	U.S.	Less than 2% USSR re-up
Combat experience	USSR	Afghanistan
Terrain flight	Even	
Instrument flight	Even	
Navigation	U.S.	Slight edge
Pilot's knowledge of maintenance	USSR	4-year degree
Maintenance system	U.S.	Technology
Overall maintenance	Even	
Human considerations	U.S.	Aircraft design
Initiative	U.S.	

Figure 2: Promotions.

USSR RANK	TIG*/TIS**	TIG/TIS (PILOT)	U.S. RANK	POSITION
JR LT	2/2		2LT	
LT	3/5	2/2	1LT	Pilot
SR LT	3/8	2/4		Senior pilot
CPT	4/12	3/7	CPT	Flight cdr
MAJ	4/16	3/10	MAJ	Squadron cdr
LTC	5/21	4/14		LTC Deputy Regimental cdr, Chief of Staff
COL	None	None	COL	Regimental cdr

*TIG: Time-in-grade
**TIS: Time-in-service

of Soviet doctors of 120 to 130 rubles. Imagine for a moment what the U.S. Army helicopter pilot's lifestyle and status would be like if paid more than twice the pay of a doctor! (The average U.S. doctor in 1980 received an annual salary of $74,500. That is nearly $172,000 to start with!)[18,19,20]

Soviet helicopter pilots have little trouble in obtaining adequate housing despite an acute shortage of housing in the USSR. Onbase housing is generally available immediately for married pilots, and often available for the single pilot. If not, offbase housing is almost always immediately available for a meager 10 to 20 rubles ($13 to $27) per month. Of course, because of the status of the Air Force officer, he will receive priority over the ordinary Soviet citizen.[21]

The leave policy for the aviator-officer is generous. He receives 45 days annually plus up to 30 days at a health resort. In contrast, nonrated officers and NCOs receive 30 days annual leave under 25 years of service; civilians receive 2 weeks leave; ordinary conscripts generally receive no leave at all. Besides the generous leave policy, the pilot continues to receive discount travel vouchers on Aeroflot and may use a vast network of resorts operated by the Soviet military.[22]

Retirement is rather complicated. The Soviet pilot incurs a 25-year obligation, but while on flight status receives credit for 1 year for every 8 months' service. (Jet pilots receive a year credit for 6 months' service.) Thus, the helicopter pilot could retire at 50 percent pay after almost 17 years. For every credited year beyond 25, he receives another 3 percent to a maximum of 75 percent. After age 55, all retirees receive 60 percent minimum up to 75 percent maximum. Mandatory retirement is based on rank and age.[23]

As can be seen, the military pilot is held in high regard in Soviet society. The selection process is highly competitive, especially considering the potential rewards. The training is rigorous and the product is capable, highly motivated, loyal and flies machines comparable to ours. They are good, but so are we, and knowledge of who that guy is in that other cockpit will keep you from perhaps over- or underestimating your foe.

[8]AF Pamphlet 200-21, p. 151.
[9]Bavaro, pp. 33-34.
[10]Bavaro, pp. 33-34.
[11]K.M. Kiernan, "Countering the Soviet Hind," *Marine Corps Gazette* (November 1983), p. 48.
[12]Bavaro, pp. 33-36.
[13]Dalziel, p. 37.
[14]AF Pamphlet 200-21, p. 165.
[15]AF Pamphlet 200-21, pp. 165-167.
[16]AF Pamphlet 200-21, p. 162.
[17]AF Pamphlet 200-21, p. 159.
[18]Barron, p. 76.
[19]AF Pamphlet 200-21, p. 165.
[20]U.S Department of Labor. *Occupational Outlook Handbook, 1982-83 Edition*, Bulletin 2200 (Washington: U.S. Government Printing Office, April 1982), p. 155.
[21]AF Pamphlet 200-21, pp. 165, 168.
[22]AF Pamphlet 200-21, pp. 147, 168.
[23]AF Pamphlet 200-21, p. 169.

What?! I'm Not Going to Be Flying!?

Major Jeffrey R. Murray

Major Murray was assigned to Headquarters and Headquarters Company, 29th Area Support Group, 21st Support Command, APO New York, when he wrote this article.

THESE WERE my words almost 3 years ago when my friendly personnel officer (career manager) from U.S. Army Military Personnel Center (MILPERCEN), now U.S. Total Army Personnel Agency (TAPA), let me know that I was one of the most important aviators in the newly formed Aviation Branch. These were his words...''What you will be doing is important.'' What he meant was that, since I had completed all of my 18-year gate requirements and was promotable (to major), I fell into the expendable class. In short, I was ripe for what was then called an additional specialty tour. The only way to remain in a flight slot was to go to Korea, but that would only delay the inevitable for a year, so I opted for Deutschland. I had been there before and thought I knew my way around. My additional specialty was 91, maintenance management, so I also thought that I would fit in rather nicely somewhere in a maintenance battalion as either the materiel officer (a fancy title for motor officer) or maybe even as an executive officer. I mean, surely these combat services support (CSS) types would benefit from the experience that could only come from a member of the Army's newest combat arms branch. Right? Not really.

Off I headed for Aberdeen Proving Grounds, MD, to learn the intricacies of maintenance management, only to become more confused. Of the five members of my class (five?), four of us were aviators. Daily we commiserated about our fate. The school managed to quickly bog us down in minutiae that I somehow did not figure ever to use. We learned manual supply and direct support supply (DSS) system procedures. We were even given Standard Army Intermediate Level Supply (SAILS) certificates. We all became fairly adept at filling out computer cards to adjust reorder points and supply lists while affixing a MEC-8 to a document identifier code A5A Priority 999 with an improper Department of Defense activity address code that messed up the ship to address and the supplemental address. When the quantity wasn't right-justified, the reverse management expense reporting er-

rored the cards out. The next thing we knew our air lines of communication order ship time (OST) was off the chart. Not quite as easy as when all we had to worry about was turning into the wind, getting the rotor into the green, finding a level spot, flaring, pulling the pitch and minimizing ground run, but a challenge nevertheless.

To back up a bit, my orders said I was going to the 9th Support Center. I asked everyone I knew at Ft. Rucker, AL, what a support center was. All I got was sympathy, but no one there knew what it was. So I asked everyone at Aberdeen what it was. No one there knew either. My welcome letter wasn't much help aside from telling me that they were glad to be getting a captain because they were short captains and had all kinds of work for one. Remember, I *was* promotable. I was beginning to get a bad premonition about things, but kept smiling. A MILPERCEN (now TAPA) representative came to Aberdeen to brief us, and I told myself that he had better know what a support center was or we were both in trouble. He knew, but he told me I was the one in trouble because the 21st Support Command, soon-to-be my parent command was super hard on its field grade officers; that a support center was another name for materiel management center (MMC) and that was where all of the visibility was in a CSS command. Peachy! I put on my cap, tucked away my SAILS certificate and headed off for Deutschland, expecting the worst.

So what does a maintenance manager do when he gets to an MMC, I mean support center? Manage maintenance, right? Wrong. Manage supply. Here I am filling a critical department shortage, and they cannot even slot me in the correct space. "So what do I do now?" I asked myself. Before long they were giving me the answers...as a major it is hard to hide even in a 200-person MMC/support center. So, while everyone else was analyzing OST segments, I was trying to analyze what they were talking about. When they spoke of demand satisfaction or demand accommodation, I got to pour the coffee. Break bulk point reporting procedures designed to reduce receipt processing time by directly informing the logistics control activity of receipts instead of relying on the transporters to do it for you, as the system is designed, made little sense to me, but I listened good. They taught me the complexities of readiness reporting: "Bottoms-Up Recon," the continuing balance system expanded, reports of discrepancy, OST segments, excess, retrograde, automatic returns, and a whole host of new acronyms the likes of which I still do not profess to fully understand... GSSB (also called the Base), COSIS, RPP, DLA, SUPCOM, AMC, TTP, MILVANs, LEAD, RRAD and last, but not least, the classes of supply (I through IX, some packaged, some maintenance related and some I have yet to figure out).* And to think it took me 2 years to figure out the difference between N_1 and N_2.

Looking back, I must say it has been interesting. I must have done okay because I ended up with the largest 0-4 quartermaster (QM) command in U.S. Army, Europe, the Reserve Storage Activity, Kaiserslautern. This activity has approximately 1,000 civilians engaged in all types of supply-related functions with a lot of COSIS (care of supplies in storage, or maintenance... my reason for coming to Germany) thrown in to keep things moving (literally). How the first personnel manager, Personnel Command in charge of under-used QM majors could let this job go to an aviator I do not know; but he did and it is more interesting than an MMC, oops, I mean support center. Notwithstanding the fact that I have yet to fully understand all what goes on in either a support center or a reserve storage activity. I have probably proved Department of the Army's theory that combat arms officers are able to "cut the mustard" anywhere they may be assigned (ever see a QM officer commanding an attack helicopter company?) and aviators in particular are good at adapting to their environment. If I had really wanted to fly all of the time, I could have remained a warrant officer. Taking a commission implied certain responsibilities and the higher in rank one climbs the fewer jobs one can find with no one doing it. I enjoyed all of my "flying" jobs, but it took this tour in my "additional specialty" to realize just how little I knew about the real action Army and to ultimately realize how important this 3-year tour was to my career. Most commissioned aviators want to command, particularly at the battalion level. This tour taught me that it takes more than knowing how to manipulate controls on a helicopter if one wants to advance to that level. Plenty of jobs are out there for new majors. While our goals should probably always point toward branch-related assignments, we should not shun the end of my non-maintenance management job. Although I am not in the market for another one anytime soon, I am probably a better officer for the experience. I sure hope TAPA remembers that when they are thinking up some new and exciting 3-year adventure for my next tour.

---

* AMC = U.S. Army Materiel Command
DLA = Defense Logistics Agency
GSSB = general service support base
LEAD = Letterkenny Army Depot
MILVANs = military vans
RPP = requisition processing point
RRAD = Red River Army Depot
SUPCOM = Support Command
TTP = total training package

ATC FOCUS
U.S. Army Air Traffic Control Activity

The Air Traffic Control Awards Program

Master Sergeant Paul J. Duale
U.S. Army Air Traffic Control Activity
Fort Rucker, AL

TIME FOR ANNUAL selection of air traffic control (ATC) awards is on us. By now, all major Army commands (MACOMs) should have forwarded their nominees for the various awards, and the director of the U.S. Army Air Traffic Control Activity (USAATCA), Ft. Rucker, AL, should be ready to convene the selection board.

The ATC awards, which began as a single award in 1972, were conceived to recognize outstanding contributions in the field of ATC. Master Sergeant Russell G. Ritter received the first Army Air Traffic Controller of the Year award.

Through the years, several awards were added to recognize individuals and units that contributed to Army ATC.

In 1976, Coleman Control Tower received the first ATC Facility of the Year award. Coleman Tower was recognized for its outstanding record of efficiency and its contributions to safety.

The ATC Maintenance Technician of the Year award, long overdue, was initiated in 1978. This award recognizes the technicians who keep ATC equipment operational. The first technician to receive this award was Specialist 6 Robert H. Stanfield.

The Combat Support Platoon of the Year award, initiated in 1982, recognizes outstanding performance by tactical units that were unable to compete under the criteria established for the ATC Facility of the Year award. The first recipient of this award was the 1st Platoon, 245th ATC Company, 58th ATC Battalion.

The newest award to be added to the program is the ATC Manager of the Year. In 1984, CW2 Richard J. Wallach was recognized for developing and implementing ATC procedures that improved the management of ATC.

Winners for 1987 were SGT Marcelino Laureano, Air Traffic Controller of the Year; Lawson Control Tower, ATC Facility of the Year; SSG Edward B. Perrone, ATC Maintenance Technician of the Year; 1st Platoon, 240th ATC Company, 59th ATC Battalion, Combat Support Platoon of the Year; and MSG Richard B. Baird, ATC Manager of the Year.

Now, you may be wondering how you can go about being nominated for one of these awards. First, you must be a military or civilian employee of the Active Army, National Guard or Army Reserve. Second, you must be nominated by your supervisor or commander. Third, you must compete against other nominees in your category to represent your MACOM. Finally, winning nominations from each MACOM will be forwarded to USAATCA for final selection.

The final selection process begins when the nomination packets are forwarded from each MACOM. These packets are due at USAATCA by 1 May. Each nominee's packet is reviewed by a 10-member Air Traffic Control Awards Board convened by the director of USAATCA. The awards board selects the most outstanding candidate from each category and forwards the selections to the commander, U.S. Army Aviation Center, Ft. Rucker.

The commander of the Aviation Center announces the winners, arranges for the award presentations and nominates the selectees as candidates for the Air Traffic Control Association (ATCA) awards.

The ATCA is a nongovernment, nonprofit, professional association of air traffic controllers that gives special recognition to those persons engaged in the development, operation or maintenance of the national ATC system or for outstanding contributions to the system. Nominees for these awards include personnel from all Department of Defense elements and the Federal Aviation Administration.

For further information on submission requirements and the selection process for the Army ATC awards program, see Army Regulation 95-37, "Army Air Traffic Control General Provisions."

Readers are encouraged to address matters concerning air traffic control to: Commander, USAAVNC, ATTN: ATZQ-ATC-MO, Fort Rucker, AL 36362-5265.