CPT Burgin

UNITED STATES ARMY

AVIATION DIGEST

SEPTEMBER 1986

. . . and still undefeated World Helicopter Champions—ARMY AVIATION!

SEPTEMBER 1986 • VOLUME 32 • NUMBER 9

1 **Aviation Captaincy,** MG Ellis D. Parker

2 **U.S. Precision Helicopter Team—Hail to the Champs!,** Mr. William J. Hayes

8 **U.S. Precision Helicopter Team—World Champs,** SFC Ed Rolph

9 **U.S. Precision Helicopter Team—Maintenance Support,** SFC Ed Rolph

10 **Military Training Routes,** Mr. Mark Twombly

14 **Check the CHUM,** Mr. Dave Caldwell

16 **The Cost of Doing Business,** LTC Kenneth O. Boley

18 **HOTLINE**

20 **Views From Readers**

22 **Have an Idea? Send it Here!,** CPT Mark J. Reardon

24 **PEARL'S: Cold Weather Survival School,** SGT Nyleen Mullally

26 **Cold Weather Survival,** COL Richard B. Pilmer, Ph.D.

28 **DES Report to the Field: Another Look at LTE**

30 **Aviation Personnel Notes: "Blank Check" Officer Evaluation Reports; Aviation Policy on Drug and Alcohol Abuse; Just the Facts**

32 **Army Aviation Museum: Bell Model 207 Sioux Scout**

33 **Waiver and Review Demystified,** CPT (P) Robert W. Weien, M.D.

36 **AH-64, A Total System for Battle,** Mr. Ron Brunelle and Mr. Philip A. Mooney

Back Cover: **ATC Action Line: Fly Neighborly, Recording of Complaints,** Mr. Robert C. Cole

Cover: **Insignia of the U.S. Precision Helicopter Team that retained the world championship this summer, in England. How did they do it? You'll find out beginning on page 2. Illustration by Paul Fretts.**

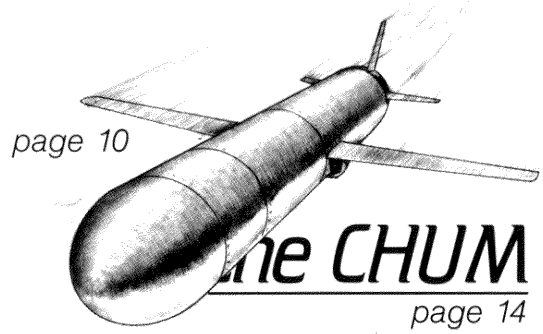

page 10

page 14

page 22

page 33

Honorable John O. Marsh Jr.
Secretary of the Army

Major General Ellis D. Parker
Commander
U.S. Army Aviation Center

Brigadier General Rodney D. Wolfe
Assistant Commandant
U.S. Army Aviation Center

Richard K. Tierney
Editor

The mission of the *U.S. Army Aviation Digest* (USPS 415-350) is to provide information of an operational, functional nature concerning safety and aircraft accident prevention, training, maintenance, operations, research and development, aviation medicine and other related data.

The *Digest* is an official Department of the Army periodical published monthly under the supervision of the commander, U.S. Army Aviation Center. Views expressed herein are not necessarily those of the Department of the Army nor the U.S. Army Aviation Center. Photos are U.S. Army unless otherwise specified. Use of the masculine pronoun is intended to include both genders unless otherwise stated. Material may be reprinted provided credit is given to the *Aviation Digest* and to the author unless otherwise indicated.

Articles, photos and items of interest on Army Aviation are invited. Direct communication is authorized by writing Editor, *U.S. Army Aviation Digest*, P.O. Box 699, Fort Rucker, AL 36362-5000, or by calling either AUTOVON 558-3178 or Commercial 205-255-3178. Manuscripts returned only upon request.

Use of funds for printing of this publication has been approved by the Secretary of the Army, 19 February 1985, in accordance with Army Regulation 310-1. Second-class postage paid at Daleville, AL, and additional mailing offices.

Active Army units receive distribution under the pinpoint distribution system as outlined in AR 310-2. Complete DA Form 12-5-R and send directly to CDR, AG Publications Center, 2800 Eastern Boulevard, Baltimore, MD 21220. For any change in distribution requirements, initiate revised DA Form 12-5-R.

National Guard and Army Reserve units under pinpoint distribution should submit DA Form 12-5-R. Other National Guard units submit requests through their state adjutant general.

Those not eligible for official distribution or who desire personal copies of the *Digest* can order the magazine from the Superintendent of Documents, U.S. Government Printing Office, Washington, DC 20402.

POSTMASTER: Send address changes to Superintendent of Documents, U.S. Government Printing Office, Washington, DC 20402.

Major General Ellis D. Parker
Chief, Army Aviation Branch

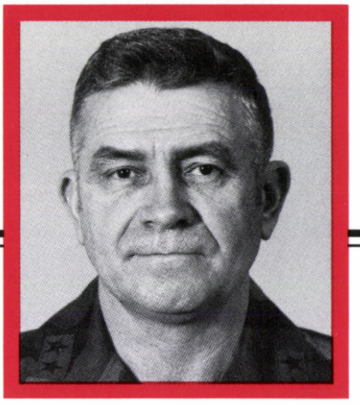

AVIATION CAPTAINCY

The greatest challenge that we, the Aviation Branch, face may be the development of captaincy in our company grade officers. Captaincy, of course, is not a skill required only of those officers in the grade of captain, but rather it is a skill required of every combat aviator from warrant officer to colonel. The grades in greatest need of mastering captaincy are warrant officer, WO1, to captain.

The captain that we speak of is defined as a "commander of a body of troops," or a "leader of a team." Our aviation teams, whether attack, utility, cargo or reconnaissance, are composed of highly skilled soldiers and complex equipment. Our aviation teams require and *deserve* exceptional battle captains.

In the fluid environment of the air-land battle, the air battle captain could be a CW2 in an OH-58 Kiowa, a CW4 in a CH-47 Chinook or a captain in an OV-1 Mohawk. Any aviator may one day be in a position where he or she must take charge of the situation and make decisions that affect not only other aircraft but also ground forces and possibly the forces of another service.

The Army Chief of Staff, General John A. Wickham Jr., has challenged all officers to gain and maintain tactical and technical competence in their duty positions and specialties. The Aviation Center is keenly aware of, and involved in, helping aviation officers meet General Wickham's challenge. Our basic and advanced commissioned officer courses have a great percentage of their curriculum devoted to combined arms tactics; the organization, equipment and missions of other branches; and introductions to the missions of other services. A great deal of time also is spent on the organization, equipment and tactics of threat forces.

Captaincy skills for warrant officer aviators have not been overlooked, either. Combined arms tactics and threat subjects are taught in the Aviation Warrant Officer Advanced Course and in the Aviation Warrant Officer Senior Course. Technical competence is taught in every initial and graduate flight course presented at the Aviation Center.

In its role as a school, the Aviation Center can only present to the young aviation officers a foundation of skills needed to develop captaincy. The primary responsibility for developing aviation captaincy rests with the individual aviator's chain of command. Each of us has a reciprocal responsibility to work toward our own captaincy and to assist in the development of our subordinates. The tactical aviation unit holds numerous opportunities to accomplish this development. The Army Training and Evaluation Program and the field training exercise are two excellent training opportunities in which the development of captaincy can be stressed. The daily support and aircrew training manual missions are also excellent vehicles for captaincy training.

The critical error that many of us have made in the development of our subordinates is not allowing experimentation or mistakes. There are times when the pressures of command make it difficult for us to relinquish enough authority to our subordinates to allow them to properly develop. We must be willing to continually delegate an appropriate amount of authority and responsibility to our subordinates. We then must become their mentors, the captain to the lieutenant, the major to the captain, the CW4 to the CW2.

By ensuring that Army aviators are vital members of their aviation battle teams, contributing their maximum efforts to the accomplishment of their teams' missions, we will ensure the development of our aviation battle captains.

HAIL TO THE CHAMPS!

CW2 Jon A. Iseminger
pilot

SSG Anthony S. Giannantonio
crewchief

CW3 Jimmy A. Green
copilot/navigator

Mr. William J. Hayes
Public Affairs Office
U.S. Army Aviation Center
Fort Rucker, AL

WHEN A U.S. ARMY aviator was named the top helicopter pilot at the Fifth World Helicopter Championship competition in England this summer, he almost became the exclusive focus of attention.

The format of the international competition places great emphasis on flight skills, almost ignoring the importance of other crew roles.

But all three members of the world champion U.S. crew saw their achievement as a team effort among three Army Aviation professionals.

CW2 Jon A. Iseminger, an instructor pilot at the Aviation Center, Ft. Rucker, AL, was the pilot for his team. CW3 Jimmy A. Green, an instructor pilot in the same unit, was the copilot/navigator. The third soldier on the team was crewchief SSG Anthony S. "Tony" Giannantonio, a member of the Ohio Army National Guard.

Two of the four events drew heavily on the pilots' skills with aircraft control. Two others were primarily oriented to navigator skills. But all four events placed a premium on crew communication, coordination and aircraft performance.

The two flying competitors make it clear that they consider the crewchiefs to be indispensable parts of the team, and in practical terms, the "owners" of their birds. "We flew Tony's aircraft," said CW3 Green, as members of the championship team waited to meet President Ronald Reagan at the Dothan, AL, airport.

In the few minutes before the President's arrival, the championship crew of three sat together, casually recounting their experience. SSG Giannantonio took charge of his OH-58 and responsibility for its maintenance shortly after he arrived at Ft. Rucker early this year. His temporary assignment took him away from his family and his Ohio Army National Guard unit for which he's a full-time crewchief for the same type of aircraft.

An aviator since 1971, SSG Giannantonio holds civil aviation ratings in helicopters and fixed wing aircraft. He's also a certified flight instructor for general (civilian) aviation. He earned an associate degree in aeronautics in 1974.

Because of his qualifications, SSG Giannantonio may be inclined to understate the crewchief's role on the team, but claimed the key to success was ". . . using those checklists, performing detailed preventive maintenance checks and services."

"If a problem came up," he said, "all the crewchiefs cooperated to deal with it quickly—it was a total team effort." SSG Giannantonio said he had absolute confidence in the machine and the crew flying it. "The best part of the experience was meeting these aviators, getting to know them and working with them," he said.

CW2 Iseminger shared similar impressions, calling the experience ". . . a lot of fun, and a pretty big challenge for most of us. The team's training program was highly organized," he said. That organization carried over into every cockpit, where each crew developed its internal communication and coordination skills.

President Ronald Reagan honored members of the U.S. Precision Helicopter Team and posed with them in front of Air Force One for the White House photographer.

photo by SP4 Anita Ellis

photo by Airman Don Tiller

photo by Airman Don Tiller

ABOVE: **Flying the OH-58, pilot CW3 James Maddox and copilot CW2 Howard Fancher, from Ft. Rucker, carefully maneuver a bucket of water during the slalom course. The Kiowa was the helicopter used in the official competition.**

LEFT: **SFC Jim Hopper, of the North Carolina National Guard, fills out the inspections logbook after his final inspections of the helicopter.**

"We spent a lot of time working to speak the same language in the cockpit," CW3 Green said. "There's no time for explanations," he added.

The team members' mutual glossary and common forms of expression gradually developed into a kind of "blood harmony." That's an expression of the subtle mutual agreement that distinguishes family vocal groups from groups whose members are not so close. "We tried to keep everything simple and to the point, to get the job done without a lot of confusion," said CW2 Iseminger.

"One of the reasons we took so much time to train was to get used to prolonged stress. The apparent stress becomes less as you learn to handle it better," said CW3 Green. "It involved a lot more stress than the everyday pressures we're used to," CW2 Iseminger added.

Handling the stress of competition and even changes to the competitive situation and rules were seen as a key to success by all team members. The team's training program included deliberately induced changes to the training schedule to sharpen crews' adaptive skills. Other stress-management efforts included a vigorous physical training program and intensive practice sessions. That training paid off in England, team members agreed.

The U.S. flyoffs, team trials and practice sessions all were conducted according to rules and procedures provided by the sponsoring organizations. But there were some local situations of terrain and equipment that proved different in England.

TOP RIGHT: **CPT Bobby Hanna directs CPT Wendy Lageman, both from Ft. Rucker, to a safe landing area in one of two UH-1 Hueys used for orientation flights.**

BOTTOM RIGHT: **Pilot CW2 Raymond Kent and copilot CW2 Patrick King, from Ft. Rucker, safely drop the champagne bottle into the roof mock-up at the end of the run.**

photo by Airman Don Tiller

photo by Airman Don Tiller

Also, a few changes were made in the events on short notice (almost no notice) as the world competition began. "For example," said CW2 Iseminger, "the helicopter slalom was conducted in a pasture with knee-high grass among the gates."

At Ft. Rucker, the practice course was laid out on a short-cropped field dotted by low cactus plants. But, at Castle Ashby, in England, the rotor wash over the waving grass could have miscued pilots regarding their relative motion. The U.S. team adapted quickly to the new situation.

In the slalom, the buckets provided for the competition were a lot bigger than those specified in the team's instructions and used in practice in the United States. The intuitive "feel" and techniques the crewmembers developed in practice with small buckets allowed them to attain a surprising finesse with the swinging water buckets.

"Once CW2 Iseminger began negotiating the course," CW3 Green said, "there was little the navigator could do other than providing occasional altitude corrections."

Placing the white bucket on the white table at the end of the course provided a further complication. The lack of color contrast and the tapered shape of the buckets made depth perception most difficult.

Everything depended on CW2 Iseminger's ability to sense distances, movement and the inertia of the bucket. "The big buckets had a lot more momentum—they were harder to start moving, harder to

photo by Airman Don Tiller

ABOVE: The arrival of the Russians was a spectacular sight for everybody to see, as they landed one by one.

RIGHT: Russian helicopter pilot Vladmir Panarin climbs out of his helicopter after arriving at Castle Ashby, England.

photo by Airman Don Tiller

photo by Airman Don Tiller

Pilot CW2 Jon Iseminger and copilot CW3 Jimmy Green lift off with a bucket of water to start the slalom course.

Prince Andrew congratulates crewchief SSG Terry Jones on the fine job that he has done on keeping the helicopters running.

photo by Airman Don Tiller

stop," said CW3 Green. But CW2 Paul W. Hendricks had been a wrecking crane operator. He used his experience to teach other crewmembers a little about the "physics" of a wrecking ball, and how they relate to mop buckets.

"Everyone had something to contribute for the good of the team," CW3 Green said. "That passing of information and experience had become part of the group's routine. When members discovered a new technique or refinement, they shared it in the crew briefings," he said.

For the cross-country events, CW2 Iseminger had to place his trust in CW3 Green's skills. The maps and instructions were based on latitude and longitude rather than metric topographic grids used by the United States and other nations' military forces.

One part of the long navigation problem involved constructing an ellipse around two reference points—a high school geometry task seldom used by Army aviators.

Just 5 minutes were allowed between the crew's receipt of instructions and takeoff. The crewmembers each developed a portion of the course, then compared results as a cross-check. They didn't appear to coincide, but it was takeoff time so CW2 Iseminger got busy with the controls. Beside him, CW3 Green continued with the plotting.

"We were 20 minutes into the course and still working out the course," said CW3 Green. But, even after their course was worked out, there still was a need for continuous timing, judging wind direction and calculating true ground speed.

"I didn't have a chance to look up until we landed," CW3 Green said.

Asked for their assessments of the key to their championship, the three crewmembers proudly spoke about confidence in their fellow crewmembers and other teammates; about confidence in their leadership, the supporting staff and the quality of their training; about cooperation, mutual support and sharing of information and ideas.

But most of all, they mentioned the teamwork that enabled the U.S. Precision Helicopter Team to successfully defend the USA's title and to return home—still acknowledged as the undefeated helicopter champion of the world.

World Helicopter Championship Articles

- "U.S. Army Helicopter Team," Reporting Final, April 1981, page 49.
- "World Helicopter Championships, the World's Best," Reporting Final, September 1981, page 22.
- "World Helicopter Champions," Major Bronislaw R. Maca, January 1982, page 2.
- "World Helicopter Championship," Mr. William Hayes, February 1986, page 18.
- "World Helicopter Champions—Ft. Rucker 1986 Finals," Mr. William Hayes, March 1986, page 30.

Note: Copies of these articles can be obtained by writing to Editor, *Aviation Digest*, P.O. Box 699, Ft. Rucker, AL 36362-5000; or calling AUTOVON 558-3178; FTS 533-3178; Commercial 205-255-3178.

U.S. Precision Helicopter Team—
World Champs

Sergeant First Class Ed Rolph
Public Affairs Office
Headquarters, U.S. Army, Europe
APO New York

WHEN MEMBERS OF THE U.S. Precision Helicopter Team returned stateside from the Fifth World Helicopter Championship competition held at Castle Ashby, England, they touched down as world champions—again!

Between 23 and 28 June, 21 world-class aviators from 5 countries matched maneuvering skills in the "Olympics" of helicopter precision flying for the first time in 5 years. In Poland, in 1981, the United States came from behind on the final day of competition to claim the world title in its first official appearance in the event. This time around, the United States erased a two-point opening-day deficit to West Germany and finished first with a 2,302 to 2,260 margin over the determined West Germans.

The Soviet Union placed third (2,093) and the United Kingdom (1,681) finished a distant fourth. Poland entered one crew, thus not figuring in the team competition.

The new World Champion Helicopter Pilot, Chief Warrant Officer, CW2, Jon A. Iseminger and his copilot, CW3 Jimmy A. Green, from the U.S. Army Aviation Center, Ft. Rucker, AL, scored 769 points for the four events—just 7 points better than a West German crew. CW2 Iseminger and CW3 Green recorded the week's only perfect "200," scored during the precision hover event.

The United States and West Germany totally dominated the competition. The Americans placed four of their five crews in the top six positions, while the Germans placed all five of their crews in the top nine spots.

Placing fourth, behind two West German crews, were (pilot/copilot) CW2 Raymond D. Kent and CW2 Patrick H. King II, both of Ft. Rucker (755).

The Texas Army National Guard crew of CW2 George W. Egbert and CW2 Paul W. Hendricks took fifth with 751 points, while sixth place went to CW3 James R. Church and WO1 Hal G. Harless, of Ft. Campbell, KY (724).

Finishing twelfth were CW3 James A. Maddox and CW2 Howard H. Fancher, from Ft. Rucker (688).

The competition was sponsored by the Helicopter Club of Great Britain for the Royal Aero Club of the United Kingdom. It promotes sporting skill and friendly relations among helicopter pilots and crewmembers worldwide.

Eight types of helicopters were flown during the competition. The United States flew the OH-58A Kiowa; the Soviets aired the Mi-2 Hoplite; West Germany competed with the Alouette II, BO 105 and Bell 205; the United Kingdom flew the Gazelle, Whirlwind 110 and Enstrom Shark helicopters.

Organizers stressed that the scores reflect individual crew skills only, and do not determine superiority of country or equipment.

The competition consisted of four main events—timed arrival and rescue, precision hover, navigation and slalom. A free-style event was on the agenda, but not a required event. The United States did not compete in the free-style portion, which was won by a West German crew.

Scoring was based on penalty points. Each crew began each event with 200 points from which penalty points were taken for various errors. Point-costing mistakes the judges looked for included late arrival at starting points, touching the ground with a load during flight, wrong directional changes and inaccurate landings.

The United States' teams, composed almost entirely of Army Aviation people, are still the undefeated world helicopter champions:

- 1986—United States
- 1981—United States (first appearance)
- 1978—Soviet Union
- 1973—Soviet Union
- 1971—West Germany

The next competition will be announced at a later date.

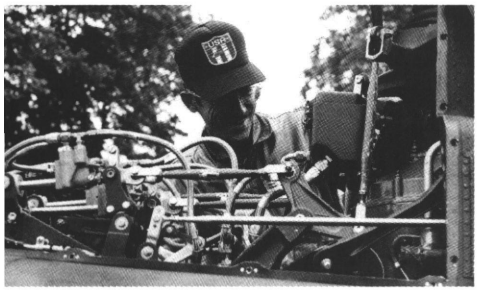

U.S. Precision Helicopter Team—

Maintenance Support

Sergeant First Class Ed Rolph
Public Affairs Office
Headquarters, U.S. Army, Europe
APO New York

WHILE PILOTS AND copilots of the U.S. Precision Helicopter Team maneuvered their OH-58A Kiowas above the gaze of international judges and spectators during the Fifth World Helicopter Championship competition held at Castle Ashby, England, last June, another part of the team went virtually unnoticed—except by the pilots.

"Just as long as the aircraft are safe and operating like they're supposed to, I'll be satisfied to let the pilots have the glory," said SFC Bob Howe, noncommissioned officer in charge of maintenance activity during the competition.

SFC Howe was one of nine crewchiefs selected from an all National Guard (NG) field of 30 nominees from the 50 states and Puerto Rico to support the U.S. Precision Helicopter Team.

Selected Were:

- **SFC Bob Howe, Headquarters, 248th Aviation Battalion, Iowa NG (hometown: Boone, IA)**
- **SFC Doug Kratz, 1064th Transportation Company, Iowa NG (hometown: Boone, IA)**
- **SFC Manuel Perez, Headquarters, State Area Command, Texas NG (hometown: Round Rock, TX)**
- **SFC Jim Hopper, Detachment 1, Company D, 28th Aviation Battalion, North Carolina NG (hometown: Salisbury, NC)**
- **SFC Clay Kimrey, Headquarters, State Area Command, North Carolina NG (hometown: Raleigh, NC)**
- **SSG Terry Jones, Company B, 28th Aviation Battalion, Pennsylvania NG (hometown: Lavelle, PA)**
- **SGT Chuck Harvey, 112th Medical Company (Air Ambulance), Maine NG (hometown: Orrington, ME)**
- **SSG Jim Hartley, 51st Attack Helicopter Battalion, South Carolina NG (hometown: Columbia, SC)**
- **SSG Tony Giannantonio, Air Troop, 107th Armored Cavalry, Ohio NG (hometown: North Canton, OH)**

"It's quite an honor to be selected," said SFC Doug Kratz. "I think the fact that the Active Army recognizes the skills of National Guard maintenance professionals says a lot for the total force concept."

The crewchiefs go through 15 to 20 pages of checklists, requiring a thorough inspection of the aircraft. And if something needs fixing, these guys know how to fix it.

"There's more than 150 years of experience in these people," said SFC Howe. "They don't need me to supervise them. They know what they're doing."

When a crewchief goes through his checklist satisfied, the pilot then double-checks various areas. Sometimes when a pilot starts the engine, and it doesn't sound just right, the crewchief rechecks some things again, according to SFC Howe.

Even when the maintenance crew and the pilot are confident an aircraft is "ready to fly," the crewchief remains safety minded.

"Tampering is always a concern, no matter where we are," said SFC Howe. "We have sure-fire methods to tell if an aircraft has been tampered with."

It is crucial for pilots to believe in their crewchiefs. "When I met my pilot and copilot for the first time last May, we knew little about each other," said SFC Kratz. "I knew shortly they had confidence in my abilities, and I now consider them both to be highly skilled professionals and personal friends."

Being a vital part of an event featuring world-class aviators representing five countries is also of significance to SSG Terry Jones. "I found the crews of the other countries to be very friendly and interested in Americans, especially the Soviets. The importance of becoming friends with people from a rival super-power country cannot be measured in trophies or dollars and cents," he said.

Whatever these maintenance crewmembers take back with them, one thing is certain: They are the soldiers—champions—who with their Army Aviation teammates enabled the U.S. Precision Helicopter Team to remain the undefeated helicopter champion of the world!

FROM LEFT TO RIGHT: **SSG Terry Jones, of the Pennsylvania National Guard, checks the hydraulic system components; SSG Tony Giannantonio, of the Ohio National Guard, fills out the flight logbook; in the next photo he cleans the windshield; and SSG James Hartley, of the South Carolina National Guard, inspects the main rotor system.** photos by Airman Don Tiller

Military Training Routes

Mr. Mark Twombly

Reprint from *AOPA Pilot*, April 1986,
all rights reserved.

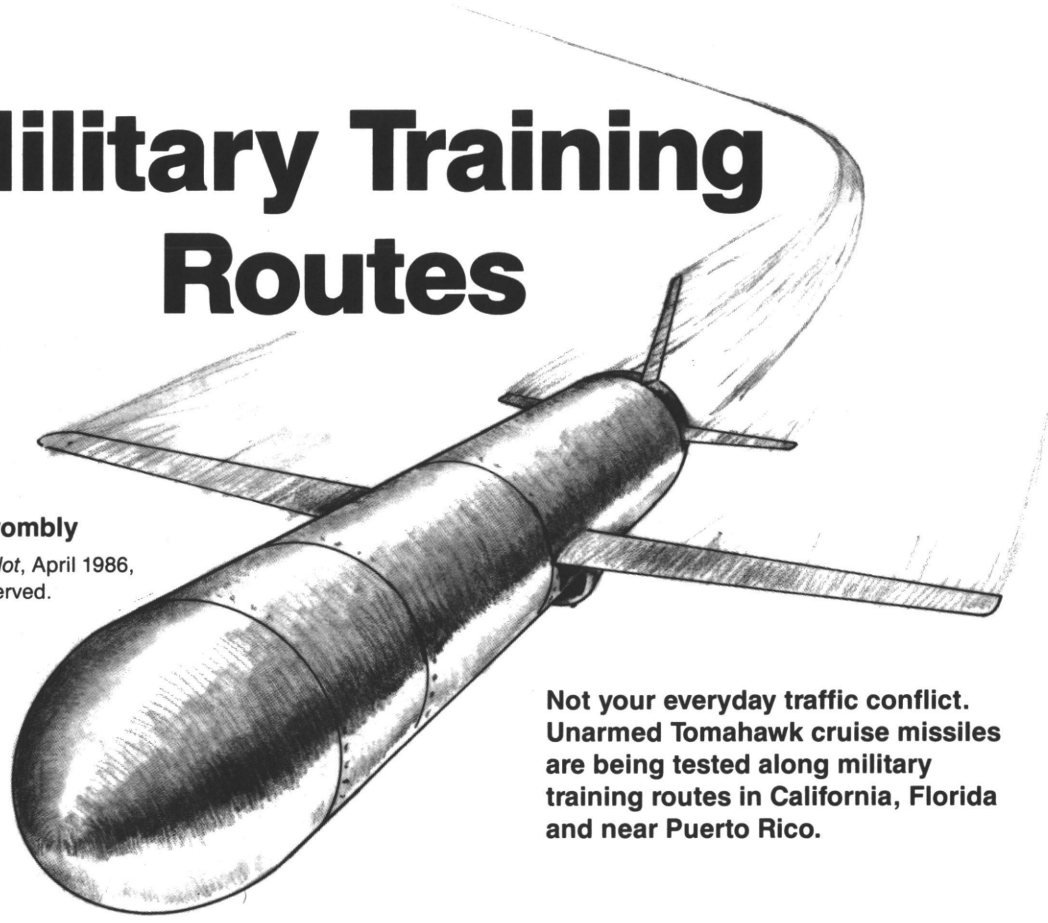

Not your everyday traffic conflict. Unarmed Tomahawk cruise missiles are being tested along military training routes in California, Florida and near Puerto Rico.

LOW AND FAST IS THE PRACTICE; SEE AND AVOID IS THE RULE.

UNITED STATES military pilots are among the most competent in the world. They acquire their skills through rigorous training and stay sharp with constant practice. Much of that training and practice is conducted offshore and in special-use airspace, including military operations areas (MOAs), alert areas and restricted areas. Civilian pilots recognize the need to exercise extreme see-and-avoid caution when flying in special-use airspace inhabited by military aircraft. But they may not be prepared for the sudden appearance of a formation of tactical fighters flying at 420 knots, 500 feet above the ground and hundreds of miles from the nearest MOA.

Military pilots operating below 10,000 feet mean sea level (MSL) are exempt from the 250-knot speed limit specified in Federal Aviation Regulation (FAR) 91.70 when operating in restricted areas, MOAs and along military training routes. (The military's waiver from FAR 91.70 also permits pilots to exceed 250 knots when involved in special exercises, when authorized to do so by their major command, and when the aircraft flight manual dictates a higher speed. For example, most fighter aircraft have recommended minimum climb and descent speeds of about 300 knots.)

Military training routes were established to provide pilots with realistic combat practice in evading radar and antiaircraft fire by flying to their targets at low altitudes and high speeds.

There are about 500 high-speed, low-level (under 10,000 feet MSL) military training routes over the continental United States, divided into two categories. Visual rules (VR) routes, which are flown under the visual flight rules in visual meteorological conditions, and in-

strument rules (IR) routes, flown under instrument flight rules (IFR) regardless of weather conditions. These military corridors attract a variety of aircraft and missions: Boeing B-52s on practice bombing runs, McDonnell Douglas F-15 fighter pilots brushing up on tactics en route to dogfight practice areas, General Dynamics F-111s on terrain-following night flights in instrument meteorological conditions and McDonnell Douglas F-4s carrying mock missiles to fire at make-believe tanks.

IR and VR military training routes are depicted on National Ocean Survey (NOS) sectional charts as narrow, pale gray lines overlaid with the route identifiers, which are three- or four-digit numbers. A four-digit number signifies a route flown at altitudes ranging from the surface to 1,500 feet above ground. Routes that extend above 1,500 feet above ground level (AGL) are identified by a three-digit number.

(There are two other types of military training routes not shown on sectionals:

- slow-speed—less than 250 knots—low altitude routes,
- aerial refueling tracks, which are higher than 10,000 feet.

They are not depicted on charts because of the additional clutter they would impose.)

The width of the IR or VR line on a sectional has no relation to the actual dimensions of the route. Military training routes range in width from 2 to more than 26 nautical miles. Several military training routes may follow the same path at different altitudes and widths.

The extent of the military training route network in the continental United States is graphically illustrated on special charts published by the Defense Mapping Agency (see "Check the CHUM" on page 14). Military training route charts are published for the Eastern, Central and Western United States. Military training routes are shown in red (IR), blue (VR) and black (slow-speed low-altitude). The points at which aircraft enter a route, make heading changes and exit also are shown. Without topographical, navigation, communication and airspace symbology to clutter the presentation, the military training routes charts show a tangled web of twisting red, blue and black lines.

The charts are distributed with *Department of Defense Area Planning Document AP/1B*, which lists the coordinates of each military training route segment, width in nautical miles, the altitude at which it is flown, hours of operation, terrain-following operations, special operating procedures such as obstructions and airports to avoid, nearby flight service stations and the military facility that originates and schedules each route.

For thorough preflight planning, you can consult the AP/1B charts and planning booklet to see if military traffic might be expected on the routes that cross your course. The charts and booklet are available from the NOS Distribution Branch (Riverdale, MD 20737) for $35 for an annual subscription or $5.50 for a one-time order. (Telephone orders are accepted, but must be charged to a Visa or MasterCard account. Telephone 301-436-6993 for a subscription order or 301-436-8194 for a one-time order.)

You also can ask a flight service station (FSS) specialist for the information. Every FSS receives copies of the AP/1B charts and area planning booklet, and a specialist should be able to tell you what you need to know about a particular military training route, including the affected altitudes, widths and hours of operation. You have to ask for the information—it will not be volunteered—and specify the routes you are interested in.

Flight service stations are supposed to be given a day's notice when a training route will be active, but that is not always the case. In addition, military pilots are supposed to contact the nearest FSS to report the time and position at which they plan to join a training route, and the exit point. However, it is possible the FSS may not hear the transmission if the military aircraft is too low.

Military pilots usually fly training routes in formations of two or more aircraft. Some of the aircraft are equipped with radar that can detect transponder signals and primary returns from other aircraft, but visual contact is the primary method of collision avoidance for military pilots flying in visual meteorological conditions. However, pilots on a low-level, formation practice run may be too engrossed in scanning cockpit instruments, looking for birds (considered to be at least as hazardous as other aircraft), conducting mock bombing and strafing runs on buildings and vehicles, and looking at each other to notice a small aircraft converging on their route. For those reasons, civilian pilots must be especially vigilant when crossing a military training route.

There have been no midair collisions between general aviation and military aircraft on military training routes in the past 5 years, according to the National Transportation Safety Board, but there have been some close calls. *Since 1 January 1981, there have been 71 reports from pilots of near-midair collisions (less than 500-foot separation)* on military training routes, according to the National Aeronautics and Space Administration's aviation safety reporting system. At least 58 involved military and general aviation aircraft including 32 between small (under 5,000 pounds) general aviation aircraft and military bombers and 20 between small aircraft and military fighters. There were six reports from military pilots of near-collisions in which the size and type of the other aircraft were not identi-

MILITARY TRAINING ROUTES

At a mile apart, a fighter and a light aircraft closing head-on at a combined speed of 540 knots allows each pilot 6.5 seconds to spot the traffic and take evasive action.

fied. In 77 percent of the reports, the near-midair occurred below 3,000-feet AGL.

Most military training routes are over sparsely populated areas, but some cross airports and residential areas. Operating rules call for military pilots to avoid flying within 3 miles and 1,500 feet of airports when practicable and to avoid noise-sensitive areas, obstructions and nuclear power plants.

Military fighters, reconnaissance aircraft and bombers are not the only aircraft that fly military training routes. The U.S. Air Force and Navy are testing cruise missiles along two training routes in the continental United States, and on overwater routes near Puerto Rico. A West Coast cruise missile test route, VR200, originates over the Pacific Ocean west of Santa Barbara, CA, and snakes north and east into a huge complex of MOAs and restricted areas near Edwards Air Force Base, ending in Nevada. An East Coast route, IR030, begins in the Gulf of Mexico east of Pensacola, FL, then travels inland over Eglin Air Force Base, turns northwest into Alabama and south and east into the Pensacola North MOA. The Puerto Rican route, IR026, passes just to the west of St. Thomas on a south heading, then turns northwest toward warning and restricted areas over the east end of the Island of Vieques. A second route, IR027, begins southeast of Puerto Rico and converges with IR026 near Vieques.

The cruise missile test routes are depicted on the New Orleans, Los Angeles, Las Vegas and San Francisco sectionals, and the Puerto Rico-Virgin Islands terminal area chart. The widths and altitudes of the routes are shown, as well as frequencies of area FSSs to contact for information. When the routes are active, notices to airmen are issued by the FSSs nearest the routes: the Lancaster, CA, and Crestview, FL, FSSs and the San Juan, PR, instrument flight service station.

Cruise missiles used in the tests are 18 feet long, 21 inches in diameter and travel at about 475 knots. Two military aircraft follow the missiles in close formation on each test flight, and a third surveillance aircraft follows at high altitude. An estimated 60 to 70 test firings have been conducted since 1978 on the West Coast route. The East Coast route has been used only once—in December 1985—and the test was aborted just after the missile crossed the shoreline. The parachute-equipped missile drifted as it descended and landed about 8 miles east of the training route in a sparsely populated area.

Cruise missiles are designed to carry either nuclear warheads or conventional explosives, but there has been only one armed test flight. An armed Tomahawk cruise missile was launched from a submarine in the Pacific Ocean off southern California and detonated on San Clemente Island.

Aircraft flying to and from the Los Angeles area on IFR flight plans often are vectored across the cruise missile route, according to a specialist at the Lancaster FSS, but the ceiling of the missile route is lower than the minimum en route altitude. There have been no reported sightings of cruise missiles by civilian pilots, according to military officials and FSS specialists at Lancaster and Crestview.

There are some commonsense rules to lessen the odds of encountering cruise missiles, jet fighters or

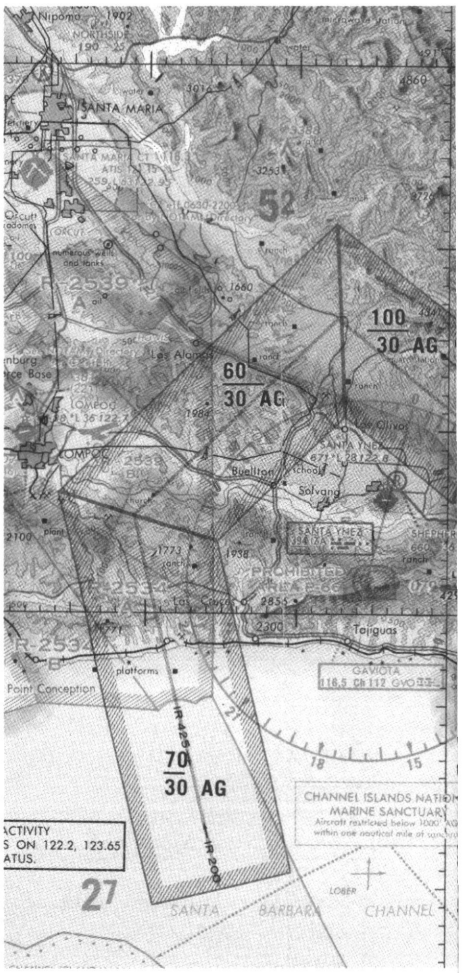

other high-speed military aircraft in open airspace. As part of your preflight planning, examine sectionals closely for military training routes that intersect your route. Check with an FSS specialist for details on training route altitudes and possible activity. Fly with lights on to make your aircraft more visible to others, and keep your head on a swivel.

It is easy to overlook a military training route when scanning a sectional prior to a flight. The routes are not conspicuous on the cluttered charts, and you have to ask the flight service station specialist for the status of specific routes—

Portion of a military planning chart (below) clearly shows a complex military training route network in southern California. By contrast, the thin, pale gray lines on the Los Angeles sectional (above) that identify the same military training routes are difficult to distinguish. The exception is IR200, a cruise missile test route that originates in the Santa Barbara Channel south of the Gaviota VOR. Width and altitudes of the route are shown on the sectional.

something few pilots do.

It is also easy to become complacent about the potential for encountering military traffic because few pilots have experienced it—or so they think. It is difficult to spot a low-flying, high-speed aircraft. It can be even more difficult to avoid one. A fighter traveling at 420 knots covers 7 miles in a minute. If a military jet and a light plane are a mile apart and closing at a combined speed of 540 knots, each pilot will have about 6.5 seconds to spot the traffic and take evasive action. That's hardly enough time for the pilot to wish he had planned his route better.

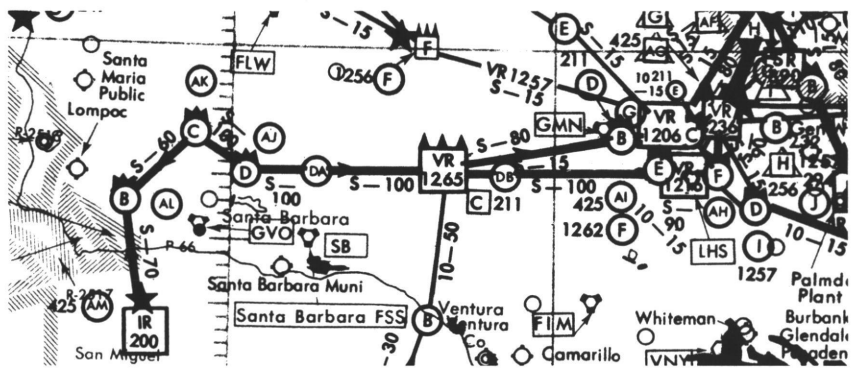

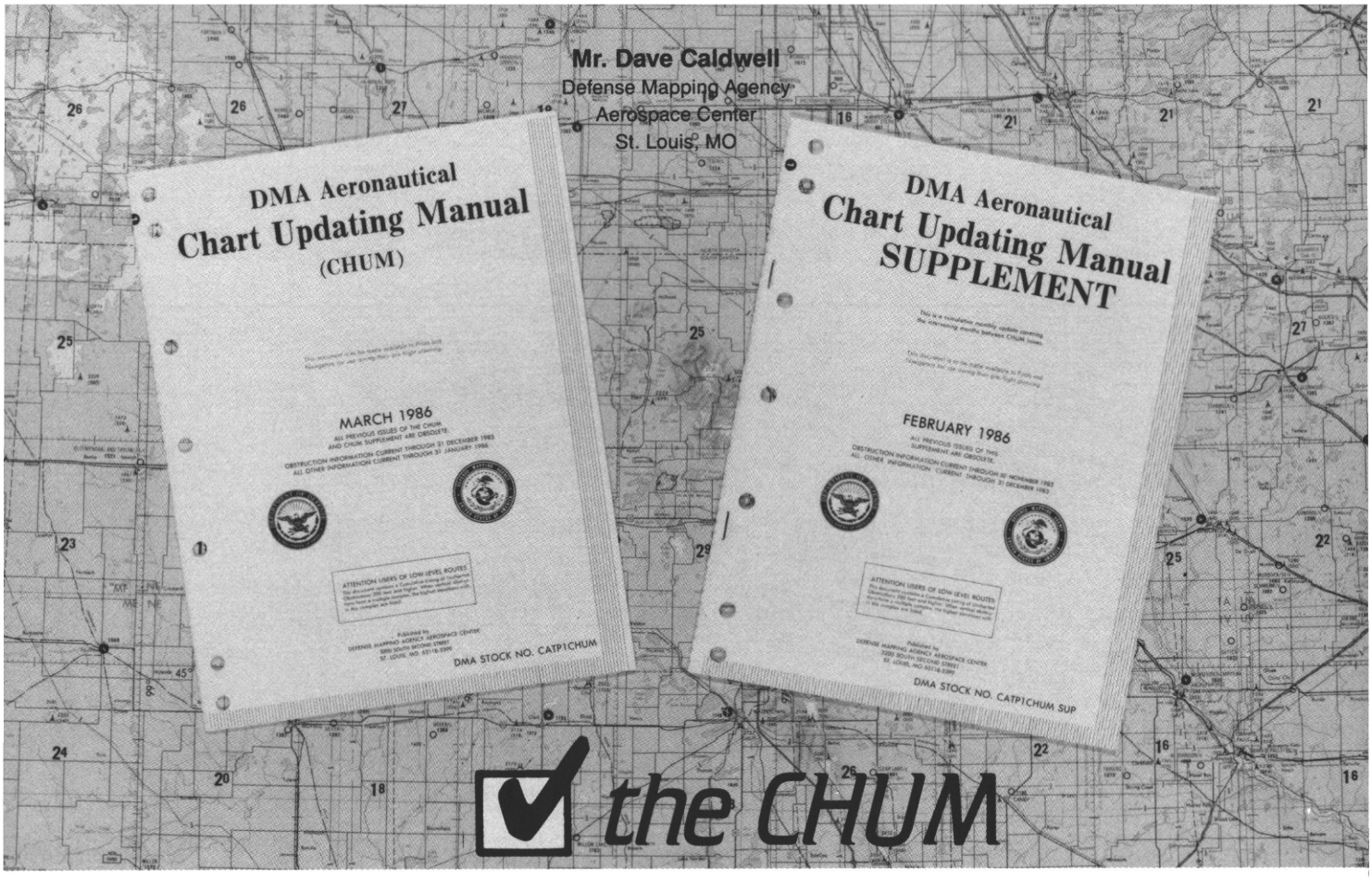

Mr. Dave Caldwell
Defense Mapping Agency
Aerospace Center
St. Louis, MO

Safety in aviation is a primary concern of the Defense Mapping Agency (DMA). An important means in achieving safety is to provide accurate and timely information to flight crews for mission planning and execution. Once provided, however, such information is worthless if preflight planning ignores it; that is, flight crews must be knowledgeable of, and trained in the use of, all timely information. The DMA Aeronautical Chart Updating Manual (CHUM) and the CHUM Supplement provide aircrews with a monthly update of currently known corrections to published DMA aeronautical charts. When flying in a low-altitude environment, it is critical to aviation safety that aircrews reference these publications prior to each use of an aeronautical chart. To this end, flight crews must have a clear understanding of the publications, their content and limitations. They must be fully aware of the significance of the CHUM and CHUM Supplement.

"THE JOB ISN'T finished till the paperwork is done." That very popular commentary is widely read and understood by all. It prompts us to attend to tasks that are required, but often approached with little enthusiasm.

Consider this expression: "Flight planning isn't finished till the CHUM has been checked." This little reminder, though somewhat less popular, is significantly more relevant to military aircrewmembers. The consequences of treating it lightly may be severe. The rewards for abiding by it could include the life of the pilot and the entire crew. Military aircrews routinely "bet their lives" on the currency and accuracy of Defense Mapping Agency aeronautical charts.

To emphasize the significance of the quoted expression, here are some basic facts for you to consider about the "CHUM."

The DMA provides aeronautical charts to all military flying organizations. These charts are produced initially to satisfy a specific operational flying requirement and then they are updated periodically through publication of newer editions.

Unfortunately, it is not possible to publish updated charts fast enough to keep pace with all the changes that occur worldwide. As aeronautical chart producers, we are constantly reviewing new source materials. Many changes to chart features are noted daily (new vertical obstructions, new powerlines, new airfield data, etc.). A method of communicating these "day-to-day" changes to military aircrews is obviously required. So, enter the CHUM—the DMA Aeronautical Chart Updating Manual and its companion publication, the DMA Chart Updating Manual Supplement (CHUM Supplement).

These publications provide military aeronautical chart users with corrections, data about hazardous conditions not previously known, and new currency information on a monthly basis, once the chart is published. The CHUM is published in March and September of each year and contains a complete listing of known aeronautical chart correction information. The CHUM Supplement is published monthly between editions of the complete CHUM and contains a cumulative listing of additional changes and corrections. These two publications, along with FLIPs (Flight Information Publications) and NOTAMs (Notices to Airmen), must be reviewed by crewmembers prior to each flight in which aeronautical charts are used.

The CHUM and CHUM Supplement are divided into sections, each serving a specific purpose. The cover contains three relevant dates: A *publication date* appears near the center of the page. Below it are the *information currency dates*, one for *obstruction information* and one for *all other information* in that publication. It is important to locate and reference the latest edition CHUM/CHUM Supplement and to understand the currency of information published.

After a table of contents, each CHUM/CHUM Supplement contains one or more pages of general information under Section I. To make effective use of these publications, aircrewmembers must read and understand Section I's instructions for reporting uncharted obstructions and its description of the criteria used for including chart corrections in the publications. A *Summary of Changes* paragraph keeps aircrewmembers informed about changes to the CHUM/CHUM Supplement itself. A *General Notices* paragraph provides broad category information on aeronautical charts. A request for user response and a legend round out the section. The information in Section I may change from time to time reflecting changes in the data provided, format or method of using the publications.

Section II contains correction data for aeronautical charts. The listed charts are arranged by series or type, then in alphanumeric order by chart number. Corrections to each chart are listed by 1-degree blocks of latitude and longitude beginning in the upper left corner of the chart and progressing left-to-right from top-to-bottom. This arrangement is designed to assist aircrewmembers to locate and transfer the corrected information from publication to chart. It is critical that aircrewmembers match the chart in use with the one listed in the CHUM/CHUM Supplement. This match is not only by chart number but also by edition number and date as well. *If all numbers do not match, the chart and the CHUM cannot be used together.* It is also significant to note that corrections listed represent those that are known to DMA. There is no intent to imply that each chart is systematically examined to identify all discrepancies that may occur. Once a correction appears, it is carried in each subsequent CHUM and CHUM Supplement until the chart in question is obsolete or replaced by a new edition.

Beginning with the March 1986 CHUM, all charts published and available are listed even if no corrections are required. This listing provides military aircrews with a handy reference for confirming that the chart they are planning to use is, in fact, the most current chart published by DMA.

Safety of flight is a main concern, and DMA is dedicated to providing aeronautical chart update information in the most timely and usable way. The CHUM/CHUM Supplement are regularly reviewed to determine if proposed changes will improve the publications' utility. If you have suggestions for improving the CHUM/CHUM Supplement or if you have a question regarding these publications, please contact the DMA Aerospace Center, ATTN: PRN, 3200 South Second Street, St. Louis, MO 63118-3399.

Remember—"Flight planning isn't finished till the CHUM has been checked."

Note: See companion article, "Military Training Routes," on page 10.

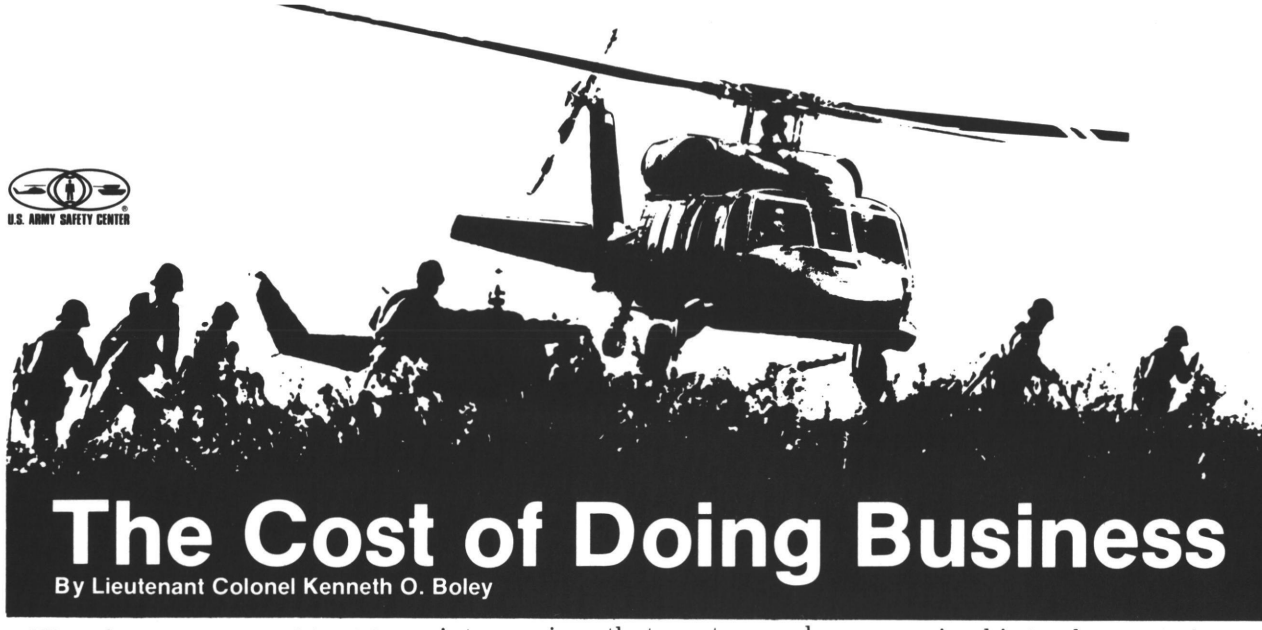

The Cost of Doing Business

By Lieutenant Colonel Kenneth O. Boley

The views expressed in this article are those of the author and are not necessarily those of the Department of the Army or the Army Safety Center.

Some in the Army view safety as an impediment to mission accomplishment while quietly harboring the belief that accidents are the natural byproduct of realistic training. During combat it is taken for granted that casualties are inevitable. That each side is almost certain to suffer casualties inflicted by its own forces is not generally taken for granted.

Our most recent wartime and contingency operation experience, Vietnam and Grenada, indicates nearly 20 percent of all deaths and injuries arose from accidents. Accidental losses of aircraft, vehicles, and equipment are believed to have been an even greater percentage of the total.

General Wickham, Army Chief of Staff, has said, "If we're serious about readiness, we have got to be serious about safety. If we are cavalier in our attitude toward safety in peacetime, then we are surely going to kill people and break machines in war. There's no magic that descends on human beings when the shooting starts that turns them into warriors, that creates people of character, that makes people feel responsible for the lives and equipment entrusted to them. If we don't learn these things in peacetime, heaven help us in time of war." Make no mistake about it—readiness is the Army's goal and training the first priority.

Safety and realistic training are not mutually exclusive. The key is to integrate safety into the operational training environment so it supports realism and relates to the wartime mission. The only thing worse than no training is bad training. Three elements are central to safe realistic training—reconciling risk with mission need, by-the-book operations, and direct command involvement in the safety effort.

Soldiers have an uncanny sense for determining the values of their leaders. If a commander is concerned about his soldiers, they will sense it. They also know if the commander is primarily concerned about his own career, covering his tracks, or putting on a good show. When the commander says safety is a top priority but becomes more concerned about impressing his boss, he is telling his unit through behavior a message quite different from that which he espouses. When there is a conflict between "espoused" behavior and "actual" behavior, people infer from actual behavior what is really important.

We must give our junior leaders the opportunity to practice the art of war. They must be allowed to operate in an environment that allows mistakes and then be coached by their superiors on how to avoid them the next time around. There is a perception among many in command that an accident equates to a career in jeopardy.

By-the-book operations are mandatory. The Army is in a state of transition, preparing for the challenges of the future. Missions are more diverse and demanding. Hundreds of new combat systems are being developed and fielded within the Army. Many exhibit unrivaled mobility and sophistication requiring a high level of knowledge by crew and

commanders alike. The Army's high expectation for excellence and "can do" attitude create pressures to take shortcuts by bypassing regulations and standing operating procedures.

The U.S. Army Safety Center recently surveyed three organizations that historically had excellent safety records to determine the characteristics that led to their exceptional safety records. The surveyed units included a combat aviation battalion, an air cavalry squadron, and an aviation battalion. Each unit had a different organizational structure and mission. Five factors were common to all three organizations:

- Performance criteria were precisely defined.
- All personnel were acutely aware of the performance criteria.
- Training was conducted to a standard.
- Immediate and effective action was taken against deviations from established performance criteria.
- Operations were conducted by the book.

The last factor is extremely important. **Unit members were proud of the fact that their organization conducted operations by the book.**

The identification of risks associated with a particular operation and the requirement to weigh these risks against overall training value to be gained is paramount. The Army's accident experience has shown that, in many instances, the individual aviator has decided what level of risk he will accept rather than the command establishing operational parameters. Class A accident investigations appear to suggest that we are poor risk managers at the company/troop level and, in some cases, accept high-risk scenarios without a corresponding increase in training value. These are not aviators doing "dumb" things, but highly-motivated officers and warrant officers getting in over their heads from a risk perspective and having an accident.

From a risk perspective we can find ourselves "boxed in" to a short-fused, high-risk venture.

The pressures to succeed are varied and intense. People often engage in wishful thinking, believing what they find desirable. We have to look no further than the NASA Challenger tragedy to reinforce this mindset. In the Challenger case, a liftoff was clearly more desirable than a delay. A "go" decision would mean the flight schedule could be kept, that the public would not be disappointed, and the shuttle program would score another major achievement.

This sort of decisionmaking process is not unique to the civilian community. The Army's leadership at any level seeks clear-cut answers to problems. Since indecision and ambiguity are not only stressful but less than desirable leadership traits, a decision seems better than delay—particularly when a deadline draws near. From a risk perspective we can find ourselves "boxed in" to a short-fused, high-risk venture which, in many instances, does not relate to our wartime mission or increase our unit's performance.

The fact is, effective realistic combat training can be conducted within an acceptable risk factor. Risks can be assessed and quantified up front and reconciled with overall benefit to produce realistic training. Risk assessment techniques are available and in use by many in the Army.

Excluding Vietnam, over the past 20 years 16,000 soldiers have been killed in accidents that cost $5.8 billion. That's enough money to organize 11 Apache attack companies or equip 12 armor battalions with M1 tanks. From a readiness standpoint, accidents are a cost the Army simply cannot afford.

In the final analysis, safety is not an impediment to realistic training; quite the contrary, safety is a conduit to effective, efficient mission accomplishment. We must change our thought process to recognize that safety and readiness go hand in glove. There is no real world distinction for a combat commander among losing a major asset to enemy fire, to a logistical shortfall, or to a catastrophic accident.

About the author

LTC Kenneth O. Boley is currently serving as the Army National Guard Liaison Officer to the U.S. Army Safety Center. In addition to being a dual-rated Master Army Aviator and a 1981 graduate of the Command and General Staff College, he holds post graduate degrees in education and management. LTC Boley has had experience as a safety officer in unit- through MACOM-level assignments.

HOTLINE

The following HOTLINE numbers can be called on official business after duty hours. They will be updated and reprinted here periodically for your convenience. If your agency has a HOTLINE it would like included, please send it to *Aviation Digest*, P.O. Box 699, Ft. Rucker, AL 36362-5000.

	FTS	AUTOVON	Commercial
Armor Ft. Knox, KY	354-8265	464-8265	502-624-8265
Aviation Ft. Rucker, AL	533-6487	558-6487	205-255-6487
Aviation Logistics Ft. Eustis, VA	988-6166	927-6166	804-878-6166
Camouflage Ft. Belvoir, VA	None	354-2654	703-664-2654
Center for Army Lessons Learned Ft. Leavenworth, KS	753-2255	552-2255	913-684-2255
Chemical Ft. McClellan, AL	538-5133/5592	865-5133/5592	205-238-5133/5592
Communications Security (Equipment) Lexington Blue Grass Army Depot Lexington, KY	None	745-3030	606-293-3030
	For users with access to STU-II equipment with the need to discuss classified matters the terminal ID number is 06050, AUTOVON: 745-3112, ext. 2. For users with access to DDN TAC ACCESS MILNET the electronic mail address is COMSEC-CTX via the STLHOS.		
Engineer Ft. Belvoir, VA	None	354-3646	703-664-3646
Field Artillery, ARTEP Ft. Sill, OK	None	639-2064	405-351-2064
Field Artillery, REDLEG Ft. Sill, OK	None	639-4020	405-351-4020
Fuels and Lubricants R&D Center, Ft. Belvoir, VA	None	354-3576	703-664-3576
Ground Power Units Tooele Army Depot, UT	None	790-2129	801-833-2129

	FTS	AUTOVON	Commercial
Health Science Training Ft. Sam Houston, TX	None	471-4785	512-221-4785
Infantry, ARTEP Ft. Benning, GA	784-2687	835-2687	404-545-2687
Infantry, School Ft. Benning, GA	784-2677	835-2677	404-545-2677
Intelligence Ft. Huachuca, AZ	None	879-3609	602-253-3609
Maintenance, AH-1 Subsystems and Associated items— Red River Army Depot, Texarkana, TX	None	829-3100	214-838-3100
Maintenance and Supply Tobyhanna Army Depot, PA	None	795-7900	717-894-7900
Missiles and Munitions Redstone Arsenal, AL	None	746-6627	205-876-6627
Nondestructive Testing AVSCOM Liaison, Ft. Hood, TX	747-6006	737-6006	817-287-6006
Ordnance (Help Line) Aberdeen Proving Gnd, MD	None	298-4357	301-278-4357
Quartermaster Ft. Lee, VA	927-3767	687-3767	804-734-3767
Signal, Electronic Training Ft. Gordon, GA	240-7777	780-7777	404-791-7777
Signal, Electronic Equipment Ft. Monmouth, NJ	None	992-3266	201-532-3266
Soldier Support Center Ft. Benjamin Harrison, IN	542-4962	699-4962	317-542-4962
Supply New Cumberland Army Depot, PA	None	977-7431	717-782-7431
Supply R&D Center, Natick, MA	None	256-5341	617-651-5341
Transportation School Ft. Eustis, VA	988-3484	927-3484	804-878-3484
Turbine Engines Corpus Christi Army Depot, TX	None	861-2651	512-939-2651

VIEWS FROM READERS

Editor:

I appeal to *Aviation Digest* to publish my comments so as to reach a majority of my fellow Army Aviation Branch members.

The recent edition of an internationally distributed helicopter magazine (*Defence Helicopter World*) contains, in detail, the organizations, missions and tactics of two of our aviation brigades. The articles are not written by a freelance reporter, but instead, are prepared by the chain of command of those units. The magazine explains that the views published are not necessarily those of the U.S. Army, but just how naive does *Defence Helicopter World* think we are?

I feel that this exploitation of our young branch serves no purpose except to gain public notoriety. Therefore, I wish to caution my fellow branch members to exercise better judgment in future articles and to refrain from attracting worldwide attention to our capabilities.

CPT Ronald W. Brumbalow
U.S. Army Aviation Center
Ft. Rucker, AL

Editor:

We are participating in an engineering research project at Concordia University, here in Montreal. The project consists of collecting data and preparing a detailed technical report about an aircraft built by the A. V. Roe Co. in Canada in the late 1950s. The aircraft was called the Avro Arrow. We would appreciate your help.

This aircraft was designed as an all-weather interceptor . . . considered to be 20 years ahead of its time. Sadly, the program had to be canceled in February 1959.

Information, technical or otherwise, on the Arrow is extremely hard to come by. It would be a great help if *Aviation Digest* readers could provide us with any information they may have on the aircraft.

Thank you for your consideration. We appreciate any help.

James Crone
C/O Prof. A. J. Saber, Ph.D.
Concordia University
Department Of Mechanical Engineering
Room B-301
1455 De Maisonneuve Boulevard West
Montreal, Quebec H3G 1M8
Canada
Telephone: Commercial
514-848-3136

Editor:

Reference the articles "Air-to-Air" by MG Ellis D. Parker and "Force Protection, Aerial Combat" by MAJ Lawrence E. Casper in the April 1986 *Aviation Digest*. Although written from somewhat different perspectives about what type units should assume an air-to-air capability, both articles were informative about the Army's developing mission.

MG Parker's article dealt solely with the Stinger missile as the armament being considered for the air-to-air mission. While MAJ Casper mentioned the 30 mm cannon in an air-to-air role, he was referring to Air Force fighters. Unfortunately, both authors did not discuss gun armament as a valid concept in Army air-to-air combat.

It is apparent that guns have recently been subjugated to missiles in several of the Army's so-called "high-tech" mission areas. Specifically, air defense and aviation come to mind. State-of-the-art technology should never be underestimated, but complete dependence can be a mistake. This is the reality of the "gun versus missile debate," even though doctrine and the lessons of history have consistently shown that a mix of weapons is the best solution in suppressing or destroying the enemy.

Both guns and missiles can contribute to the optimum combat capabilities of Army Aviation units. Guns tend to have a quicker reaction time; a negligible dead zone; are not as affected by bad weather and ground clutter; can be fired in an electronic countermeasures environment; and are credited with a greater "scare factor" against enemy pilots. Missiles have a considerably higher lethality rate; are much better at extended ranges; and can adapt to target maneuver. Since each type of armament complements the other's weaknesses, it seems clear that a combination of these weapons is the most effective way to meet the threat. My message to the Army Aviation community is that guns are viable on today's battlefield and that planning should incorporate them into the weapons mix.

CPT J. R. Moore
Army Armament Materiel Readiness Command
Dover, NJ

Editor:

We would appreciate your assistance in announcing our survival interview program by publishing the following: We are looking for people who have experienced a survival episode, either military or civilian; the details would be used to enhance our training. We will relate your valuable experience to let

others know what might be expected and how they might feel. Please contact us at Headquarters, Air Training Command, ATTN: DONZ, Randolph AFB, TX 78150-5001, AUTOVON 352-2371/2171 or Commercial 509-247-2371/2171.

SMS Paetz
Nav/Surv Tng/Life Spt
Randolph AFB, TX

Editor:

Hats off to CPT McGowan, author of "Dear Lieutenant," which appeared on the back cover of the May 1986 issue. My experience allows me to attest to his advice being the best a fledgling second lieutenant aviator could ever receive. Every aviation unit commander should hand a copy of this to all new arriving flight school graduates.

MAJ Robert E. Etheridge
Assistant Professor of
Military Science
University of Illinois

Editor:

Your article concerning LAMSON 719 (June and July 1986) made me recall my tour in Vietnam as a door gunner and crewchief in 1967 and 1968. The article concerning LAMSON 719 also made me wish I would have been back in Vietnam on a subsequent tour then.

In 1971, the United States was only trying to find a way out of Vietnam, and was determined to do so even if it would put North Vietnam in a position to win, which was soon to be the case anyway. Army Aviation not only played a prominent role, but also a most admirable one in LAMSON 719. In spite of what was to come about, at least one group of Americans had still not lost the will to win.

I regret that I was not a participant in LAMSON 719.

SSG Frank B. Austin
APO New York

COUNTER-AIR

On 1 July 1986, a new division was activated at the Army Aviation Center, Ft. Rucker, AL, to provide the Army a focal point for all matters dealing with Army Aviation air-to-air combat. The Counter-Air Development Division has set up shop in the Directorate of Combat Developments and is located in building 513. At the controls is MAJ Mike Brittingham, with CPT Greg Hampton in the number 2 spot. The *Aviation Digest* will carry an article about the Counter-Air Development Division in the near future. It will outline the division's concept of operations, plans and programs. Meanwhile, the Counter-Air-Development Division *is open for business*. Its address is: CDR USAAVNC, ATTN: ATZQ-CDD, Ft. Rucker, AL 36362-5000; telephone: Commercial 205-255-3124, AUTOVON 558-3124, FTS 533-3124.

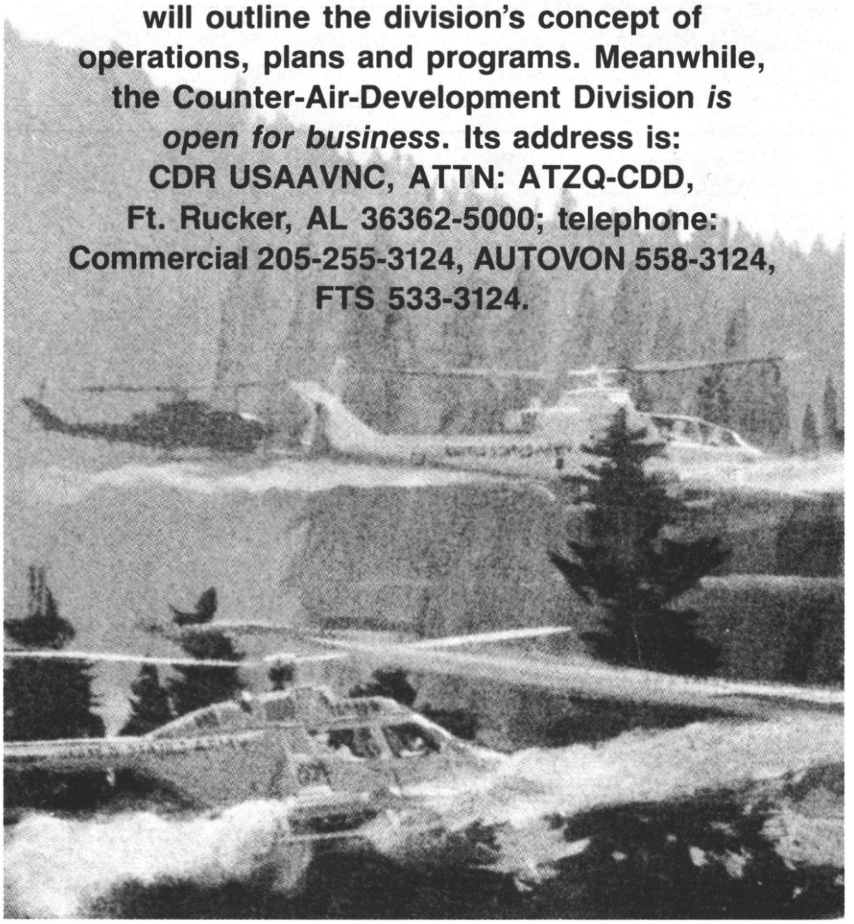

*Articles from the **Aviation Digest** requested in these letters have been mailed. Readers can obtain copies of material printed in any issue by writing to: Editor, **U.S. Army Aviation Digest**, P.O. Box 699, Ft. Rucker, AL 36362-5000.*

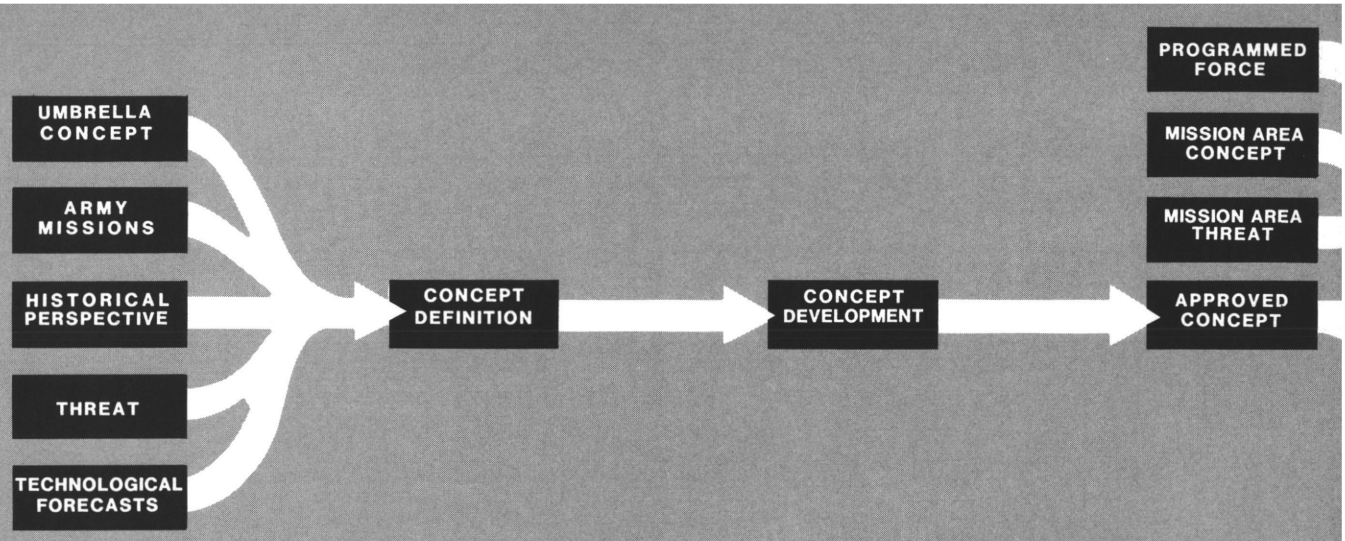

HAVE AN IDEA? SEND IT HERE!

Captain Mark J. Reardon
Directorate of Combat Developments
U.S. Army Aviation Center
Fort Rucker, AL

EVERYONE IN THE military has participated in a conversation that goes something like,

- I don't know why we do it that way.
- Why did we buy that equipment?
- The manual should say . . .

The concluding statement to the above usually is, "I have a better way, but nobody will listen to me." With that it's soon forgotten. But, there is an agency at the Aviation Center, Ft. Rucker, AL, that can use your ideas to benefit Army Aviation as a whole.

Previously it was true that materiel solutions sometimes dominated and had great influence on the development of training, organization and doctrine. The Army tended to perceive materiel solutions and technology as the most effective answer to identified deficiencies. The results were expensive and they didn't always generate the best equipment available to the soldier.

To correct this shortcoming, the concept-based requirements system was initiated (see diagram). This is a system in which operational concepts (a general idea that describes the performance of one or more combat, combat support or combat service support functions) are adopted based on our understanding of the threat and the requisites for success in modern warfare. Deficiencies in the existing force structure are then identified and prioritized. Solutions take the form of modified or additional training programs, new doctrine, refined organizations and materiel fixes. Materiel solutions are the least preferred because they take longer to integrate into the force structure and they are the most costly.

The U.S. Army Training and Doctrine Command (TRADOC) and the Army Materiel Command (AMC) act as the agencies for change within the Army. TRADOC manages the Army school system and is responsible for combat development, training development, training and training support activities of the Army.

TRADOC's mission is to prepare the Army for war. It approves proponent center/school field manuals, field circulars, and other training and doctrinal literature.

AMC is the materiel and systems counterpart of TRADOC. It has responsibility for the research, development and acquisition of equipment and all support for the readiness of fielded materiel. AMC's goal is to equip the Army for combat. This is being accomplished by introducing new systems and extending the service life of existing weapons.

In the 10 years or so that it takes to develop and produce a new system, the threat that the new system was designed to meet may have changed.

Often, putting new technology into an existing system can counter the threat. TRADOC and AMC, with Department of the Army-level guidance, have put into motion these changes the Army must undergo to meet the rapidly varying requirements of modern combat operations. Changes include:

- Purchase of nondevelopmental items (foreign or commercial that exist and require no research and development funds).
- Increased emphasis on upgrading existing weapon capa-

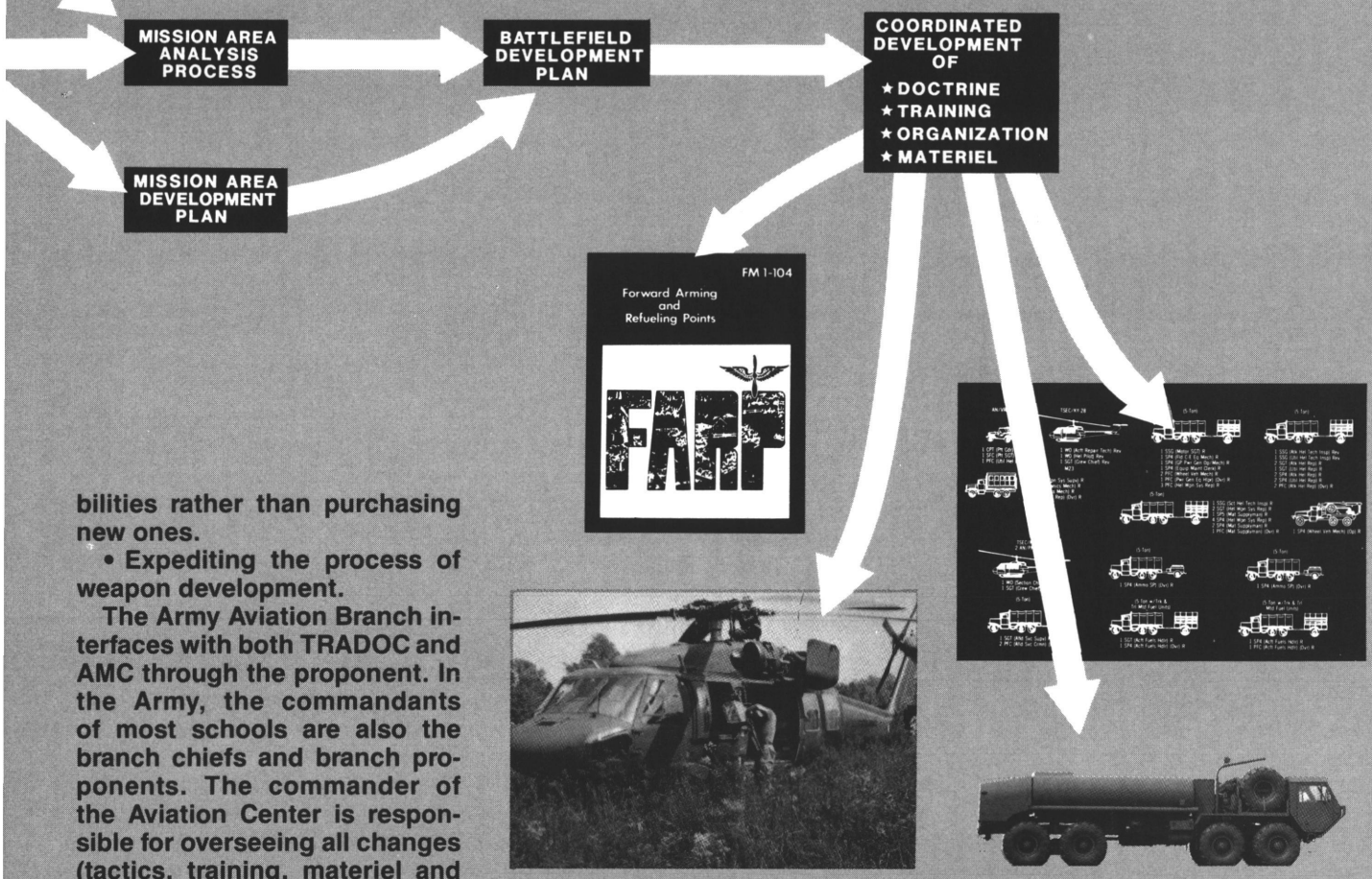

bilities rather than purchasing new ones.

• Expediting the process of weapon development.

The Army Aviation Branch interfaces with both TRADOC and AMC through the proponent. In the Army, the commandants of most schools are also the branch chiefs and branch proponents. The commander of the Aviation Center is responsible for overseeing all changes (tactics, training, materiel and organization) that involve Army Aviation. Ft. Rucker is truly the "Home of Army Aviation" for it encompasses not only aviator training, but also the writing of doctrine, design of aviation organizations, creating materiel requirements for industry, and overseeing force development test and evaluation. The Aviation Center's Directorate of Combat Developments is the primary focal point through which the commander initiates these changes.

To individual aviators, maintenance officers and crewchiefs this means there is somebody who wants to hear about their recommendations for new doctrine, organizations, tactics and training. Usually the simplest ideas are the best. While the Army Aviation Branch has populated Ft. Rucker's developmental and teaching organizations with some of the best subject matter experts in the business, we realize there are many soldiers in the field with similar levels of expertise. Far too long this valuable resource has remained virtually untapped. Now you can send your ideas to the Concepts Branch, Directorate of Combat Developments (DCD) for evaluation. No particular format is required. Send your

If we cannot address your suggestion within DCD, it will be forwarded to the appropriate Aviation Center directorate and thoughts on how we can improve Army Aviation to:

Commander
U.S. Army Aviation Center
ATTN: ATZQ-CDC-C
Ft. Rucker, AL 36362-5000

we will provide you with feedback concerning your idea. All contributors should understand that this is not connected in any way with the official U.S. Army suggestion program.

PEARL'S

Personal Equipment And Rescue/survival Lowdown

Cold Weather Survival School

I started working with aviation life support equipment (ALSE) in December 1982, when I was hired for the flight operations position at the Army Aviation Support Facility (AASF) in Rapid City, SD. Since, I have given numerous classes/lectures on the wear and use of ALSE. Those classes have increased since I moved to the AASF in St. Paul, MN, and took the ALSE position here. It includes speaking on ALSE at quarterly aviation safety council meetings, passenger/crewmember briefings, crewmember orientations, etc. Although I had quite a bit of experience, schooling and "expertise," I never had used any of the equipment in a survival situation, and when asked questions on specifics of use or operation of the components, my excuse of: "Well, how should I know, I'm not on flight orders," usually worked. Unfortunately, I think that this is the case with many ALSE technicians.

Sergeant Nyleen Mullally
Army Aviation Support Facility
Minnesota Army National Guard
St. Paul, MN

SGT Mullally learns how to build a snow shelter at the Cold Weather Survival School in Ely, MN.

We can work magic ordering hard-to-get items, repair helmets with speed and accuracy, describe and locate (while blindfolded) all the components in the survival vest. But, can we teach the fundamentals of survival? You may say that survival training is "not part of our (ALSE) job." I disagree!

There are many different survival schools available for aircrewmembers to attend, all excellent, but many of our people have a difficult time attending any school because of civilian jobs, families, training budget problems or the like. As ALSE technicians it is our responsibility to train these people, whether in actual survival situations or in classrooms, to take up the slack when they cannot attend formal schools.

Another group habitually overlooked when considering survival training is nonaviation people who frequently fly in Army aircraft (adjutant generals, staff officers, aides, company, battalion, brigade, division commanders, and staffs and many others). They face the same difficulties in survival situations as do the crewmembers. They too need survival training that ALSE technicians can provide.

I recently attended the Cold Weather Survival School run by the U.S. Army Reserve at Ely, MN. Aside from practical application of survival skills and information that I learned, I also became aware of mental and physical problems that can affect even healthy individuals faced with nontactical survival situations.

The lack of food, warmth, shelter, companionship and hope for rescue all mesh together to erode the will to live. It spawns a feeling and experience that people can't be taught about or fully understand until they experience it and learn how to deal with the issues causing this feeling of despair. The students learn skills needed to properly use the components provided with survival vests and survival kits; skills that aren't covered in books. They see first-hand that those components really do work. The course, an invaluable learning experience for me, should be required for *all* ALSE technicians. Solid ALSE programs involve many factors that are based on ALSE

Dawna Salazar
photo by Benjamin Martel

SURVIVAL KIT, INDIVIDUAL, SRU-21/P

1. **Povidine-Iodine Ointment, 10 ea**
2. **Skin Closure, Adhesive, 1 pkg of 10**
3. **Soap, Nonfloating, 1 ea**
4. **Aspirin, 10 ea**
5. **Eye Ointment, 1 ea**
6. **Bandage, Gauze, Elastic, 2″ x 5 yds**
7. **Bag, Plastic, 6″ x 6″, 1 ea**
8. **List of Contents**
9. **Bandage, Adhesive, ¾″ x 3″, 12 ea**
10. **Water Purification Tablets, 1 Btl**
11. **Razor, Surgical Preparation, 1 ea**
12. **Mosquito Headnet and Mittens**
13. **Matches, Waterproof, 1 ea**
14. **Bag, Food Storage, 3 ea**

technicians. Good ALSE technicians are molded by:

- ALSE expertise,
- Survival knowledge,
- Survival experience.

Initially, *ALSE expertise* is the most important goal. Once that is achieved, the *survival knowledge* and *survival experience* should be given emphasis to a greater extent than they currently receive. It is up to each ALSE technician to work toward being fully informed about the business of survival. As ALSE technicians we owe our aircrewmembers and their passengers at least that much.

If you have a question about personal equipment or rescue/survival gear, write PEARL, AMC Project Officer, ATTN: AMCPO-ALSE, 4300 Goodfellow Blvd., St. Louis, MO 63120-1798 or call AUTOVON 693-3817 or Commercial 314-263-3817.

COLD WEATHER SURVIVAL

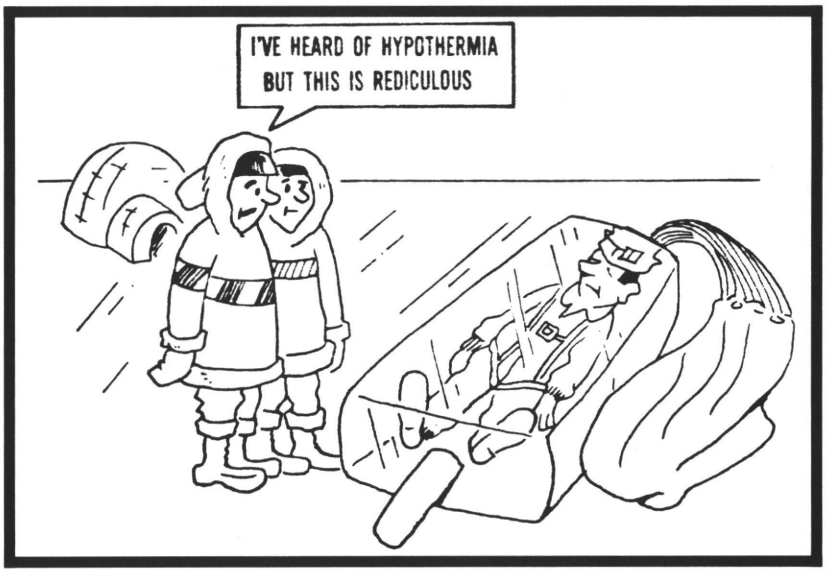

HERE ARE 10 quick reminders for prevention, recognition and treatment of hypothermic injuries among those who find themselves as survivors of an aircraft accident, or in any survival situation in cold weather:

Colonel Richard B. Pilmer, Ph.D.
Human Factors Analysis Division
Air Rescue and Recovery Service
Scott Air Force Base, IL

I. The military survivor's mission is to evade the enemy and to return to a friendly, safe environment as soon and as safely as possible. Achieving this depends upon the same basic requirements for success in any endeavor: *Be in good physical and mental condition.*

II. Neither the Army nor nature can present you with the *will* to survive. But the more you are *prepared*, the easier it will be to cash in on your determination.

III. Keep dry. Avoid snow blindness. Check for frostbite. Stay near but not in the aircraft. Especially, don't try to walk any distance after water immersion. Build a fire, take shelter and get wet clothes off. Remember that overexertion can

cause dehydration due to perspiration under clothing or insensitive water loss through the lungs. *Snow blindness* can occur even on cloudy days. If you don't have glasses, cut eye-slits in wrap-around material. The first sensation of *frostbite* is numbness rather than pain. You may not detect the grayish or yellow-white areas before freezing; if so, *do not* rub with snow, but warm the affected areas as soon as possible in water between 105 and 110 degrees Fahrenheit. (Lukewarm to normal hand feeling.)

IV. Prevent hypothermia. When the body temperature begins to fall below the normal 98.6 degrees Fahrenheit, the most common first sign is shivering. This is followed by decreased blood flow to the brain. Judgment and will may become impaired and there is difficulty in talking and walking. When core temperature drops below 86 degrees Fahrenheit, shivering stops and the muscles become rigid.

V. Build a fire. Keep water-proofed matches in your flight suit pocket or survival gear. Retaining body temperature keeps both your physical and mental well-being up.

VI. Melt snow or ice (better) for drinking water. Keep your hydration and survival mental attitude on a rocky mountain high.

VII. Cook all food sources. It adds to body heat, warms your spirits and decreases the chance of viral or bacterial intrusion.

VIII. Build a shelter in the first daylight. Ensure adequate ventilation for small fires. In crew situations, rotate one person near the entrance to listen for aircraft sounds (snow is a great insulator).

IX. Keep aircraft surfaces swept off to provide contrast for airborne rescuers. Tramp-out snow signals. Cut vegetation to maximize contrast between the snow and the aircraft. Have "bird nest" (quickly inflammable) signal fires set in position ready to light.

X. Keep your feet warm and dry. Exercise toes and feet. Loosen footgear periodically. Elevate feet and legs during rest intervals. Call on prayer or meditation. Keep a log of your activities.

Hang in there: Don't let yourself forget that people are "out there" looking for you and they will find you. The USA needs you and tries like no other country to rescue its citizens in distress!

Class members and instructors of the Cold Weather Survival School in Ely, MN, from 12 through 16 January 1986.

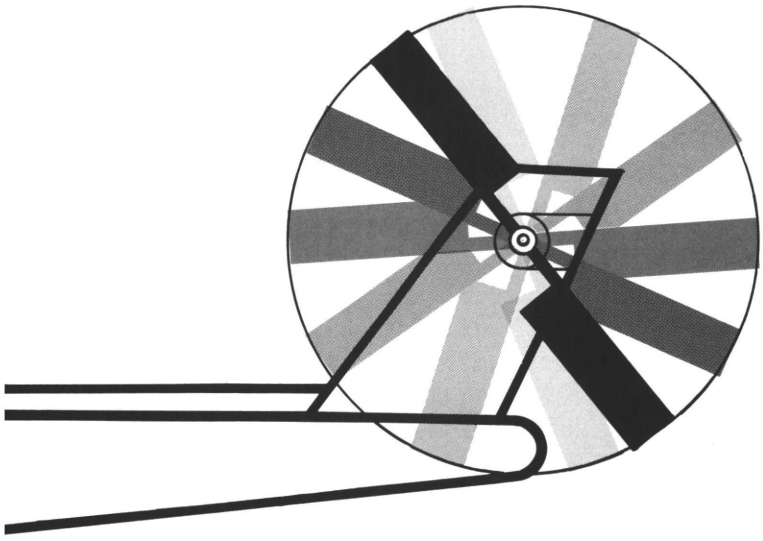

Another Look at L T E

Adapted by Mr. Tim Cochran, Directorate of Evaluation and Standardization, Ft. Rucker, AL, from information furnished by CWO Gustafson, WESTCOM.

MUCH HAS BEEN published about the flight characteristic of loss of tail rotor effectiveness (LTE) during the last 2 years. It is apparent that aviators have read and attempted to learn about the various wind regions and can discuss them with a reasonable level of confidence in their knowledge. It is now time to move to the next level of learning on this vital subject.

To avoid LTE, the best training is to experience the various wind regions and to analyze each in detail. Each region has definitive characteristics and the aircraft reacts to each in a consistent and predictable manner.

The discussion below about a stabilized hover should increase aviators' knowledge and skills, thereby reducing their exposure to LTE induced accidents. Although not an aircrew training manual maneuver, it can be done safely and represents nothing more than an in-ground-effect (IGE) or out-of-ground-effect (OGE) hovering turn.

OGE hovering operations will be conducted consistent with paragraph 6, Headquarters, Department of the Army message, DACS-ZB, 151325Z March 1984, subject: Aviation Safety Fiscal Year 1984. Begin the maneuver by establishing a stabilized hover into the wind at an altitude from 3 feet (minimum) to OGE. Assure that all power indications are in the normal operating range—do not use transient or time limited ranges. Clear the helicopter of other aircraft and obstacles. Execute a series of left pedal turns and note the aircraft handling conditions as described below.

• First, turn 90 degrees left so the wind is from the right. The aircraft should be relatively stable. Depress the left pedal to counter the aircraft's tendency to weathervane back into the wind; but pedal input must be steady. The power requirement will be slightly higher due to the amount of left pedal required. The cyclic is displaced into the wind, but only normal movements are required.

• Second, turn 90 degrees left, so the wind is from rear of aircraft, to enter weathercock stability region. Initially, the aircraft becomes relatively stable with power reduced to about normal hover power, pedals returned to the normal position, and the cyclic displaced into the wind. As the wind or aircraft heading shifts slightly left or right, the aircraft responds in one of two distinctly different manners:

Left turn induced: The aircraft starts a slow left turn which if not corrected does not increase in rate. If uncorrected, the turn continues or the aircraft simply weathervanes and stops, approximately in the wind direction. Only slight right pedal inputs are

required to maintain heading control.

Right turn induced: The aircraft starts a right turn which if not corrected accelerates and induces a vortex ring state and a spin. Positive left pedal inputs are required with power changes appropriate to the pedal applications.

In the weathercock stability region, the aircraft has a tendency to "hunt" or "wander" left and/or right. Apply the pedals smoothly in both directions as needed to maintain heading control. Left pedal inputs tend to be more positive. Power is commensurate with pedal applications. The cyclic is normal and displaced into the wind.

• Third, turn 90 degrees farther left, so the wind is from the left side of the aircraft, to enter vortex ring state. A noticeably pronounced airframe vibration develops due to the rapidly changing conditions on the tail rotor. The power requirement is reduced from that needed at normal hover because the wind is assisting in counteracting torque. The left pedal requirement is less, due to the reduced power requirement, and the cyclic is displaced into the wind. But, this is an extremely unstable condition in which the control conditions mentioned above change rapidly. Specifically, as the tail rotor develops and sheds vortices, the required pedal position changes accordingly and is characterized by rapid pedal inputs in both directions at varying and unpredictable rates and amounts. These pedal reversals require corresponding power and cyclic inputs. The result is a "high pilot workload" requiring the pilot's full attention.

• Fourth, turn about 60 degrees left to the vicinity of the disk vortex region, which is quite transitory in nature and may be impossible to enter due to wind and other conditions. If the disc vortex region is encountered, the aircraft turns sharply to the right. If not corrected, a spin develops as in the weathercock stability region (right turn). In this region, the pedal inputs are returning to those needed in the normal hover position and are relatively stable. But, rapid left pedal inputs of a random amount and frequency are required, followed by a right pedal input as the disc vortex clears away from the tail rotor. The airframe vibrations from the vortex ring region are subsiding, but reappear if the disc vortex crosses the tail rotor.

• Fifth, turn into the wind. Note that control positions and responses return to normal.

The above indications are based on steady wind conditions of about 10 to 15 knots. They may vary with changes in environmental conditions and may be obscured by strong gusts of wind or other changing conditions.

WARNING! The *maximum* wind for this hover maneuver *must not exceed* 20 knots; the *maximum* gust spread must not exceed 10 knots. If *any* doubt exists about safety while attempting this task OGE, the pilot must assure full aircraft control and abort the maneuver or return to IGE flight condition.

DES welcomes your inquiries and requests to focus attention on an area of major importance. Write to us at: Commander, U.S. Army Aviation Center, ATTN: ATZQ-ES, Ft. Rucker, AL 36362-5000; or call us at AUTOVON 558-3504, FTS 533-3504 or Commercial 205-255-3504. After duty hours call Ft. Rucker Hotline, AUTOVON 558-6487 or 205-255-6487 and leave a message.

U.S. Army Class A Aviation Flight Mishaps

	Number	Flying Hours	Rate	Fatalities	Total Cost (in millions)
FY 85 (to 31 July)	40	1,253,850	3.19	28	$75.9
FY 86 (to 31 July)	28	1,313,084*	2.13	24	$66.6

*estimated

AVIATION PERSONNEL NOTES

"Blank Check" Officer Evaluation Reports

Many officers are signing the equivalents of "blank checks" on their officer evaluation reports (OERs), according to Major Gary W. Stinnett of the U.S. Army Military Personnel Center's (MILPERCEN) Evaluation Appeals and Corrections Branch.

"AR 623-105 charges rated officers with verification of the accuracy of parts of their OERs," MAJ Stinnett said. The affected areas are:

- Administrative data, Part I;
- Designated rating officials, Part II;
- The Army physical fitness test and height and weight entries in Part IV.

"An officer's signature in Part IId indicates that the officer reviewed the information," MAJ Stinnett said, "so signing blank copies of DA Form 67-8 is like signing blank checks. MILPERCEN receives many requests for correction of administrative data even though the officers signed their OERs in Part IId."

In such situations the rated officer must prove that the error should be corrected. Such administrative appeals require extra effort to establish how or why the officer signed the OER in Part IId, but was unaware of the error.

"Since OERs often need to be retyped, there is nothing wrong with rated officers signing a few extra DA Forms 67-8," MAJ Stinnett said. "However, all the administrative data in Parts I and II, and items 3 and 12 in Part IVa, must be entered on the forms and verified by the rated officer before signing."

Aviation Policy on Drug and Alcohol Abuse

Soldiers who are serving in Army Aviation specialties and who abuse drugs and alcohol will not be permitted to remain in this field, according to Lieutenant Colonel Marvin H. Baker, chief of MILPERCEN's Enlisted Personnel Aviation/Transportation Branch.

"As part of its continuing crackdown on alcohol and drug abuse, and to enhance Army Aviation safety," LTC Baker said, "the Army will prevent sol-

diers with histories of substance abuse from holding Army Aviation military occupational specialties (MOSs). The risks to Army Aviation are so great that the Army has changed AR 611-1 and AR 611-201 to reclassify soldiers identified as substance abusers."

Changes in regulations affect any soldier identified as having wrongfully used, manufactured, transferred, sold or held in possession a narcotic, controlled substance or dangerous drug. Such a soldier will be disqualified from Army Aviation service, suspended from Army Aviation duties and reclassified into a nonaviation MOS.

"Reclassification is mandatory whether the abuse was identified through a urinalysis test, conviction by a civil or military court or punishment under Article 15," LTC Baker said.

These regulations also require that soldiers involved in alcohol abuse be temporarily removed from Army Aviation duties and referred to the Army Alcohol and Drug Abuse Prevention and Control Program. Such soldiers will not be returned to Army Aviation duties until they successfully complete the program and receive waivers from the MILPERCEN commanding general.

Soldiers involved in second incidents of alcohol abuse will be removed from Army Aviation duties and reclassified into a new MOS. A soldier identified for reclassification may request a specific MOS, but final MOS choice is based on the needs of the Army.

"These changes are intended to send a clear message to soldiers and commanders," LTC Baker said. "There is no place in Army Aviation for those guilty of substance abuse. The importance of the mission, cost of aviation equipment and chance of injury or death if a soldier suffers from drug abuse on the job—these truly permit no compromise."

Just the Facts

How can I find out about becoming an Army aviator?

Enlisted personnel should refer to the provisions of AR 611-85, "Aviation Warrant Officer Training," for the answers to this question. Commissioned and warrant officers should refer to AR 611-110, "Selection and Training of Army Aviation Officers."

Do I have to be a pilot to be an Army astronaut?

While the requirements for becoming an Army astronaut do not include being a pilot, the academic requirements are indeed high. For the answers to all the requirements that must be met, you should go to your military personnel office (MILPO) and ask for a copy of MILPO Letter 85-10, dated 18 April 1985, Subject: Army Astronaut Selection Program.

I just became an Army helicopter pilot and I feel that my experience in aviation could best be used by becoming an Army engineering test pilot. How do I become one?

The engineering test pilot program requires an extensive background in mathematics and aerodynamics. It is a very competitive program and candidates are centrally selected by MILPERCEN. For more details, obtain a copy of DA Circular 351-84-3.

I'm an Army aviator and would like to receive a transition into the new AH-64 Apache aircraft. How do I go about getting the training?

It is important that every officer realize that becoming qualified in any advanced aircraft system is based upon the needs of the service and that, once qualified in that system, an officer must expect repetitive utilization tours in that aircraft. When you submit a request to MILPERCEN for any training, there must be appropriate justification for your receiving that training. If you are occupying a position requiring the specific skills provided by the desired course or if you are destined to be assigned to such a position, then your request will be considered according to priorities and the availability of training. To request training in any advanced aircraft, you should submit a DA Form 4187 through your chain of command to your appropriate assignment officer branch at MILPERCEN.

I'm an Army aviator and I have been having trouble updating my total operational flying duty credit on my Officer Record Brief. Can you tell me how I go about getting the record straight?

Total operational flying duty credit is automatically updated when an officer leaves a flying duty position. Occasionally, this automated procedure fails. When this occurs, and upon discovery, the officer or the MILPO needs to contact MILPERCEN's Aviation Plans and Programs Section at AUTOVON 221-8156/8157 to have the situation corrected. Further information regarding aviation career incentive data is in DA Circular 600-85-1, "Aviation Career Incentive Act Flying Data."

GOAL – $2,500,000
SEPTEMBER 1986 – $2,050,000 cash and pledges

Army Aviation MUSEUM

This is a series about the Army Aviation Museum Foundation fund drive. Currently, plans call for building a modern complex to house your Army Aviation Museum. Since last month additional donations have been received. However, we still have a ways to go, as the barometer above shows. If you would like to help "build" the Army Aviation Museum's new home, you are invited to send a tax deductible contribution to: The Army Aviation Museum Foundation, Box 610, Ft. Rucker, AL 36362-5000. If you desire additional information call Mr. Ed Brown at (205) 598-2508.

A Look At What's In Your Museum

Bell Model 207 Sioux Scout

The Sioux Scout was built by Bell Helicopter Company in the early 1960s to demonstrate that firm's concepts in an attack helicopter. In several respects this aircraft was the prototype of Bell's AH-1 series gunships introduced in 1966. Using an H-13 airframe and parts, the Sioux Scout incorporated an integrated gun system and tandem seating with the gunner up front. Several advanced devices were tested with this aircraft, including the "one control" flight system for the gunner and the "hands-off" tracking gun sight system. The turret housed twin 7.62 mm machineguns and carried dummy rockets on the wing stubs to show that additional armament could be carried. This one-of-a-kind helicopter first flew in July 1963 and during the following 16 months it was demonstrated to the Army throughout the United States. In 1971, it was donated to the U.S. Army Aviation Museum by Bell.

MONTHLY WRITING AWARD

Waiver AND Review DEMYSTIFIED

Captain (P) Robert W. Weien, M.D.

Conditions that constitute a waiver, and those medical conditions that warrant a permanent medical disqualification, are addressed in the following article.

SEVERAL YEARS ago (I'll let you guess how many) I was an Army aviator. I lived in mortal fear of the flight surgeon.

I had seen a copy of Army Regulation (AR) 40-501, "Standards of Medical Fitness," and was shocked by chapter 4, which concerns standards for flying duty. It listed page after page of disqualifying defects. I thought that if I were to acquire any one of those defects that my aviation career would be over. I had no idea there was such a thing as a "waiver" (I didn't know much about aviation medicine, in those days).

While I was in flight school my vision deteriorated to 20/40, and I thought it would pass over that magic 20/100 line at any moment (I didn't know much about ophthalmology, either). Consequently, I dreaded my flight physical every year. I thought I only had to misread one line on that eye chart, and all my wonderful flying would end, immediately and irrevocably. I knew this because I had read it in AR 40-501.

Unfortunately, I had not read far enough, or I would have encountered the section dealing with waivers. I never understood any of this until I went to the Army Flight Surgeon Course, and began working on the inside of the rubber glove.

It has become apparent to me, since working as a flight surgeon, that many Army aviators are as ignorant about these matters as I was. My goal in this article is to demystify the waiver and review process,

Waiver AND Review

and to clarify the procedure for getting a waiver.

Let's start with some definitions.

AR 600-105 defines a *medical disqualification* as unfitness for flying duties, per AR 40-501. That's a pretty broad statement, but it simply means that one of the items on that laundry list in AR 40-501 applies to you. It can be temporary, or permanent. Let's consider those separately.

A *temporary suspension* is imposed by your local flight surgeon for a medical condition which he considers to be "temporary." What's temporary? AR 600-105 defines temporary as less than 6 months. When the condition has been resolved, the flight surgeon puts the aviator back "up" (with a Department of the Army Form 4186, or "up-slip") and no further administrative action is required.

An example here is the common cold. If an aviator cannot clear his ears, or must take medications for symptomatic relief, then he should be grounded. A cold almost never lasts 6 months, so this action is handled locally with "up-slips" and "down-slips."

Another example is the inguinal hernia. Suppose you are pumping too much iron, and feel something pop in your groin. You go to your friendly flight surgeon the next day, and he confirms your fears: You have a hernia! The regulation clearly states that it is disqualifying until 30 days after it is repaired. If you can get it fixed within 6 months, then having a hernia is no more damaging to your career (and flight pay) than a common cold.

A *permanent medical disqualification* is the administrative term for any medical condition that is expected to last longer than 6 months. This can be a condition that is expected to be lifelong, such as a high frequency hearing loss, or it can be a disease process that can be expected to be resolved *after* 6 months have passed; such as a badly broken leg.

When a disqualification is identified that is expected to last longer than 6 months, the flight surgeon must perform a medical work-up, and then submit an appropriate request to the Army Aeromedical Activity (AAMA). The appropriate request may be for a waiver, or it may be for permanent disqualification and removal from flight status.

What is a *waiver?* A waiver is a document from Military Personnel Center (MILPERCEN) (or the Guard Bureau) that grants flight status in spite of a disqualifying defect. It does not make you UN-disqualified; it simply says that it's OK to fly with the medical condition you have acquired. (By the way, a waiver may not be granted for initial pilot selection, or Class 1 and 1A standards. The regulations simply do not allow it.)

What conditions are waiverable? A waiver will be considered if the condition is:

- Unchanging
- Not likely to become progressive
- Not likely to interfere with performance
- Not potentially disabling
- Unlikely to become a claim against the Army.

What specific conditions are waiverable? The list of diseases for which waivers have been granted is too long to include here. Some of the more common ones are: defective visual acuity (the one I was so worried about); high frequency hearing loss; and high blood pressure (if controlled with acceptable medications).

How do you get a waiver? First the disqualifying defect must be identified. This can be during the annual flight physical, or it can result from a sick call visit, or any one of a number of other ways. Regardless of how it came to light, the next stop should be your flight surgeon's office. He has the training to assess the aeromedical aspects of your diagnosis (which are often quite different from the medical aspects) and can make a recommendation concerning your continued flight status. If he wants to recommend a waiver, he must prepare an aeromedical summary and send it to AAMA at Ft. Rucker. There it will be reviewed by the Aeromedical Consultant Advisory Panel (ACAP); they will make a further recommendation to the waiver authority (usually MILPERCEN or the Guard Bureau). If it is appropriate, the waiver will be issued by the waiver authority.

What about a condition for which a waiver is not appropriate? Regrettably, these conditions do occur. If a defect is not waiverable, or if a temporary suspension lasts longer than 6 months, then steps must be taken that will result in action by the waiver authority

to terminate aviation service. In English, that means you must be permanently grounded. (The old term for this was "indefinite suspension.")

"Permanent," in this case, is not an absolute term. For many diagnoses it is possible to get back onto flight status after a permanent grounding. The obvious example is pregnancy. A pilot who becomes pregnant must be grounded as soon as the diagnosis is made. There are numerous reasons for this. First, during pregnancy a woman is at greater risk for suddenly incapacitating events, such as miscarriage. Second, it is not known what effect the aviation environment has on the developing fetus. Fuels, oils and exhaust gases all represent toxic exposures of unknown significance. Third, serious questions exist concerning the legal rights of the fetus as an individual. In the event of a birth defect, or the involvement of the fetus and mother in an aircraft accident, is the Government liable for damages to the fetus? Does the Army have the right to order the fetus, presumably a civilian, to participate in regular and frequent flights in military aircraft?

In any event, the flight surgeon is obligated to process a pregnant aviator for medical disqualification. The Aviation Career Incentive Act of 1974 and AR 600-105 state that any aviator who is to be medically disqualified for a period in excess of 6 months must be permanently grounded. This obviously includes pregnant aviators. After she delivers her baby, she can get back "up" with little difficulty, providing all else is fine.

Another example is the badly broken leg mentioned before. It is often clear from the outset that it will take more than 6 months for an aviator to be ready to fly after a severely broken bone. Therefore, the flight surgeon should submit paperwork recommending medical disqualification soon after the accident. Once the fracture has healed and the pilot has full strength and range of motion, the flight surgeon can submit another request, this time asking for the aviator to be restored to full flight status.

Sometimes, of course, an aviator acquires a defect for which a waiver is not possible, and which is probably lifelong. These people must be processed for permanent medical disqualification and termination of aviation service.

Examples include uncontrolled hypertension, a major head injury, coronary artery disease and many types of cancer.

Who makes these decisions at Ft. Rucker? As mentioned before, the ACAP is the body that makes medical recommendations to the appropriate waiver authority.

The ACAP consists of several highly experienced flight surgeons and two Master Army Aviators one of whom must be present for the ACAP to convene. The ACAP is not a "paper" board, but meets in formal session, usually weekly.

Cases to be considered are presented by physician members of the board, and an open discussion of the relative merits of each case takes place before a recommendation is made.

What are the chances that any given waiver request will be approved? Over the last several years, ACAP statistics have been remarkably consistent. About 84 percent of all waiver requests have left with a recommendation for waiver. This number must be considered carefully, however. The medical condition is the most important factor in the probability of a waiver being recommended.

For example, the chances of a waiver being recommended for defective distant vision approach 100 percent. On the other end of the spectrum, a waiver request for a disabling brain tumor has no chance of being approved. In the middle of the spectrum, a high blood pressure waiver depends on the degree of control, and upon which medications are being used.

In summary, a clear cut, orderly process exists that, in most cases, will allow you to continue flying despite a disqualifying medical condition. Your flight surgeon and the ACAP want to keep you flying and will do all they can to keep you in the air.

The bottom line is: I didn't have so much to worry about, after all.

References

1. AR 40-501 (Change 34), "Standards of Medical Fitness," chapters 2, 4 and 10, 1 December 1983.

2. AR 600-105, "Aviation Service of Rated Officers," chapter 3, 1 January 1984.

ABOUT THE AUTHOR

Captain (P) Weien, a former Medical Service Corps aviator and graduate of the Aircraft Maintenance Officer/Test Pilot Course, served with air ambulance units in Korea and at Ft. Lewis, WA. After graduating from Louisiana State University School of Medicine, he completed an internship at Fitzsimmons Army Medical Center. He was chief, Review and Disposition Service at the Army Aeromedical Activity, Ft. Rucker, AL. He has been accepted for the U.S. Army Residency in Aerospace Medicine, effective this month.

AH-64

A TOTAL SYSTEM FOR BATTLE

This article, the second in a series about the AH-64 Apache, addresses the helicopter's airframe, its survivability characteristics and its communications/navigations equipment. This information is for familiarization purposes and must not be used as a basis for operating or maintaining the aircraft.

Mr. Ron Brunelle
Mr. Philip A. Mooney

Airframe Structure

The Army's powerful, new AH-64 Apache attack helicopter is rapidly bursting onto the scene with a sturdy, semimonocoque fuselage designed to withstand the heavy stresses encountered in combat. The fuselage, constructed from conventional aircraft materials, is externally painted with a special visual/infrared signature-reducing paint.

The Apache's aluminum skin is a flat wrap with minimum compound curves, which greatly enhances field maintenance. Also, its wings, vertical stabilizer, stabilator and nacelles are bolted on for easy removal and replacement. Most of the fairings around the propulsion and drive components are of a material called Kevlar that is lighter and stronger than fiberglass. Honeycomb structure is kept to a minimum due to its lack of damage tolerance and because it is difficult to repair.

The AH-64 has been vulnerability tested against 12.7 mm armor piercing incendiary (API) and 23 mm high explosive incendiary projectiles. The airframe (figure 1) consists of five major sections:

- Forward fuselage,
- Center fuselage,
- Engine nacelle and upper fairing,
- Tail boom,
- Stabilator and empennage.

Two forward avionics bays on either side of the copilot/gunner station provide stowage for "black box" avionics, armament and electrical equipment (figure 2). Locating this equipment forward makes

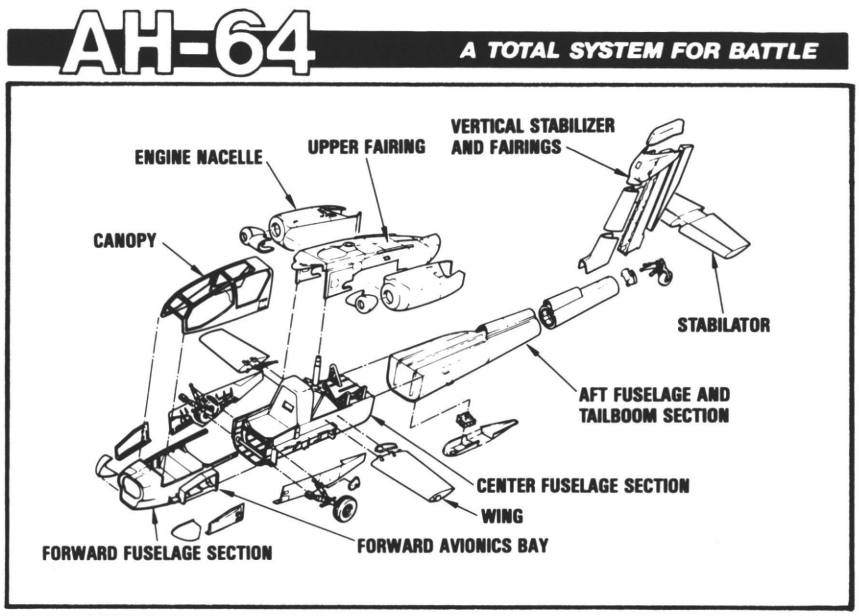

FIGURE 1: Major airframe sections and subsections.

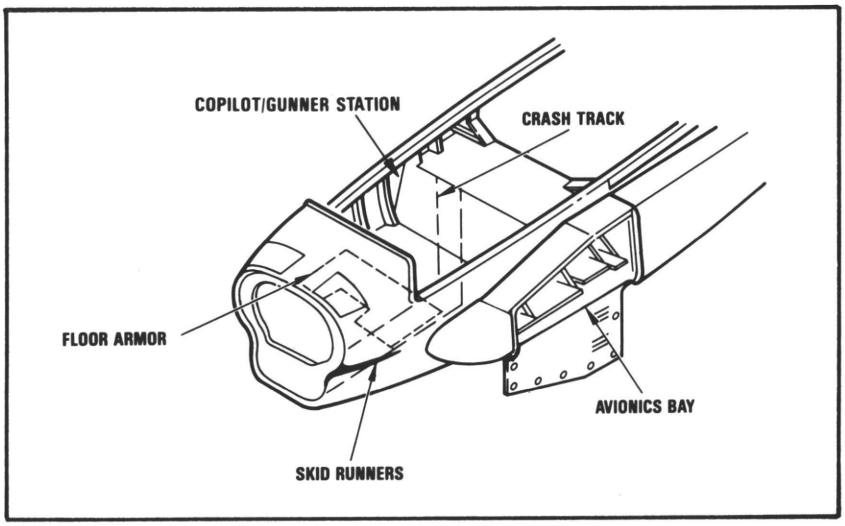

FIGURE 2: Forward fuselage section.

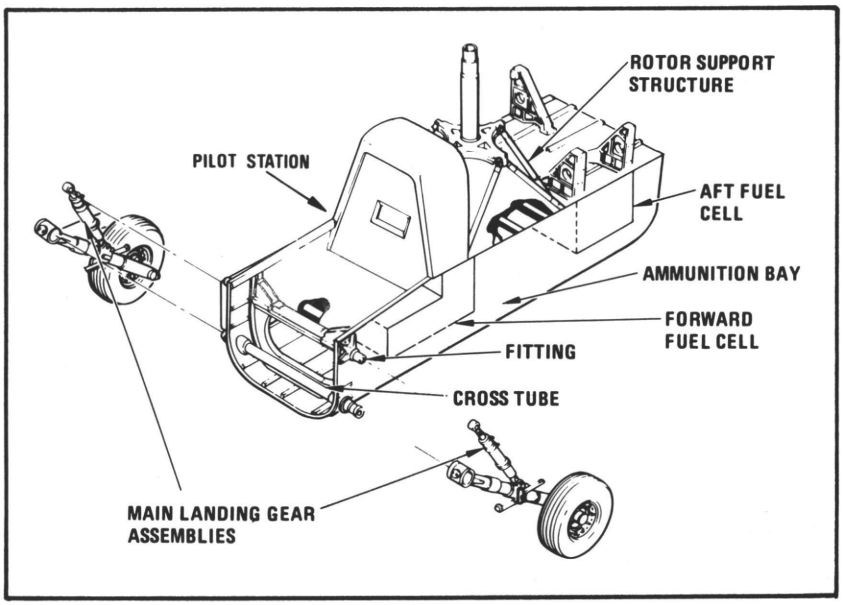

FIGURE 3: Center fuselage section.

the center of gravity less critical as fuel is consumed.

Two fabricated aluminum structural members running the length of the forward fuselage section make up the skid runner installation. During a crash landing, the skid runner is in contact with the ground and helps prevent longitudinal collapse of the forward fuselage section and "plowing" of the nose.

The area weapon crash track assembly consists of two upright aluminum forgings that are integral with the canted bulkhead. The two upright crash track members form a guide for the area weapon to be crushed upward into the fuselage. The crash track assembly is designed to retain the area weapon within the crash tracks and between the skid runners to prevent the weapon from being torn away and damaging the fuel cells.

Armor is installed in the floor of the copilot gunner's (CPG's) crewstation. The forward fuel cell assists in protecting the pilot.

The center fuselage section (figure 3) is the primary support structure for the airframe. It supports the main landing gear, main rotor support structure, canopy, wings and the fuel cells.

Main landing gear on the Apache are connected by a cross tube assembly that runs through the center fuselage section. Landing gear assemblies are designed to support the aircraft on solid terrain slopes to 12 degrees longitudinal and 12 degrees lateral fuselage attitudes.

The main rotor support structure consists of a stationary mast and its support structure, which is installed in the helicopter at a 5-degree forward tilt angle.

The support structure provides for the mounting of the main transmission and is designed to carry all flight loads. This design allows the use of a much lighter transmission than is needed in conventional helicopters; also, transmission removal and installation do not require the disassembly of flight controls.

The canopy covers the tandem crewstations and spans most of the forward fuselage section and part

of the center fuselage section. Its primary purpose is to place the crew in a controlled environment. Access to the crewstations is provided by doors on the right side of the canopy. The canopy frames and the blast shield form a rollover structure. Five acrylic panels and two laminated glass windshields make up the canopy.

Attached on either side of the center fuselage section, the stores support wings provide a means of attaching ordnance pylons. The wings are of semimonocoque design and have two upper and two lower attachment fittings at the wing root. Intercommunications panels for ground personnel are located in each wingtip, aft of the anticollision lights.

A standard type pitot tube is on the leading edge of each wing, about 6 inches inboard of the tip. The left-hand pitot tube routes *ram air* to airspeed transducer number 1 and to the CPG's airspeed indicator. *Static air*, provided through a static port on the left-hand side of the fuselage, is routed to airspeed transducer number 1 and to the CPG's airspeed indicator, vertical speed indicator and barometric altimeter.

The right-hand pitot tube routes ram air to airspeed transducer number 2 and to the pilot's airspeed indicator. Static air for the air data processor (ADP), airspeed transducer number 2, and the pilot's airspeed indicator, vertical speed indicator and barometric altimeter is provided through a static port on the right-hand side of the fuselage.

Pitot heat, 28 volts, direct current, for the right wing pitot tube heating element is provided through the pitot heater circuit breaker on the pilot's center circuit breaker panel. It is controlled by the pilot's anti-ice panel pitot and sensor switch. Left wing pitot heat power is provided through the air data direct current breaker on the forward circuit breaker panel.

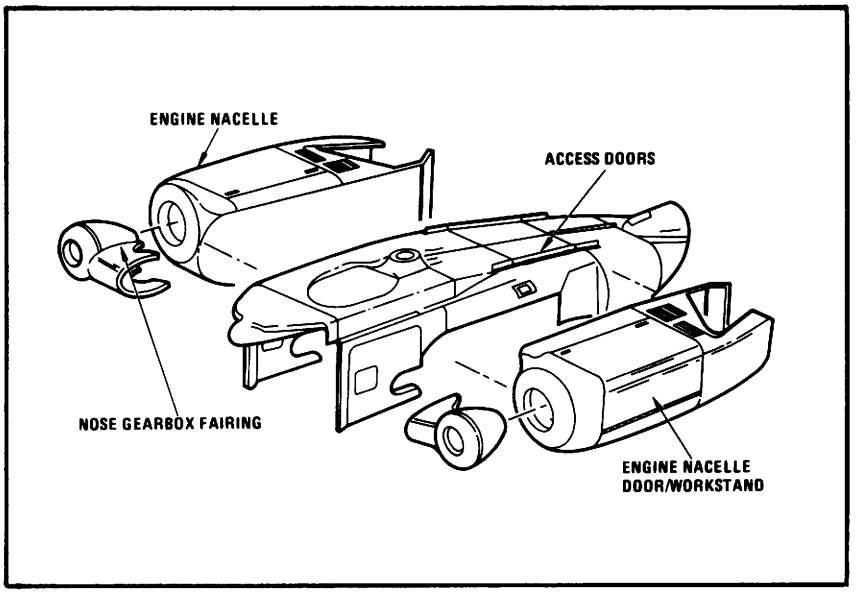

FIGURE 4: Upper fairing.

Two fuel cells are located in the center fuselage at either end of the ammunition bay area. They are bladder type and self-sealing to 12.7 mm penetration. The low-level portion of each cell is self-sealing against 14.5 mm penetration.

Apache's upper fairing and engine nacelles (figure 4) are attached to the center fuselage section. The upper fairing assemblies are constructed of aluminum and Kevlar and form an aerodynamic cover over the transmission deck area. These fairings are designed to assist in cooling certain aircraft components and fluids, and contain access doors for maintenance functions. The engine nacelles assist in the cooling process for engine and airframe fluid components. Engine nacelle access doors also form maintenance workstands when open.

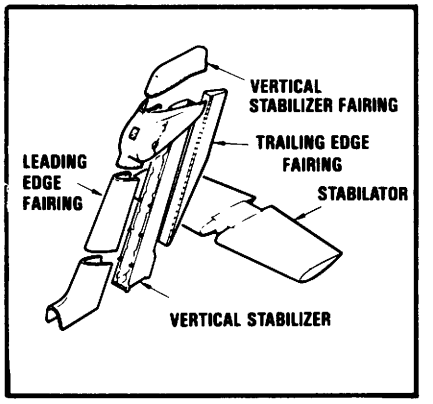

FIGURE 5: Stabilator and empennage.

The tailboom is mounted to the aft end of the center fuselage section and provides mounting points

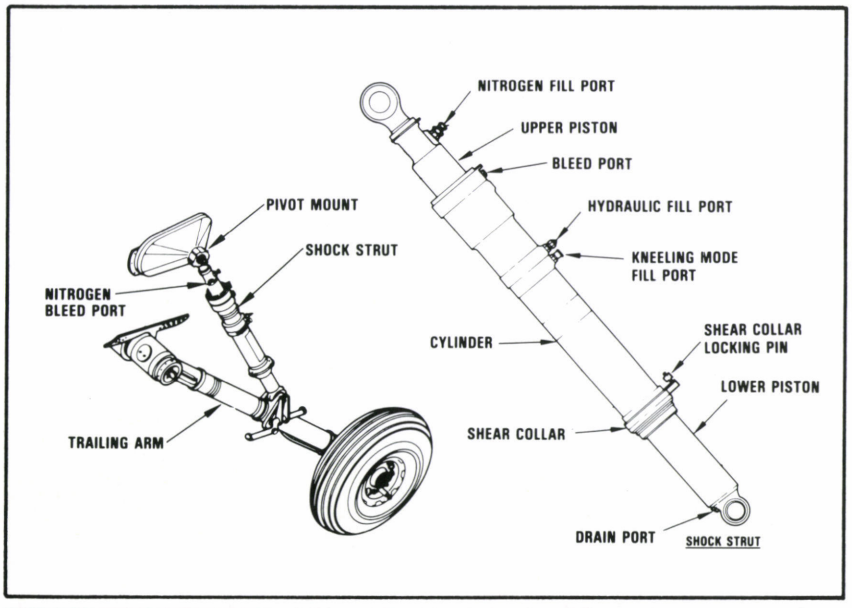

FIGURE 6: Main landing gear.

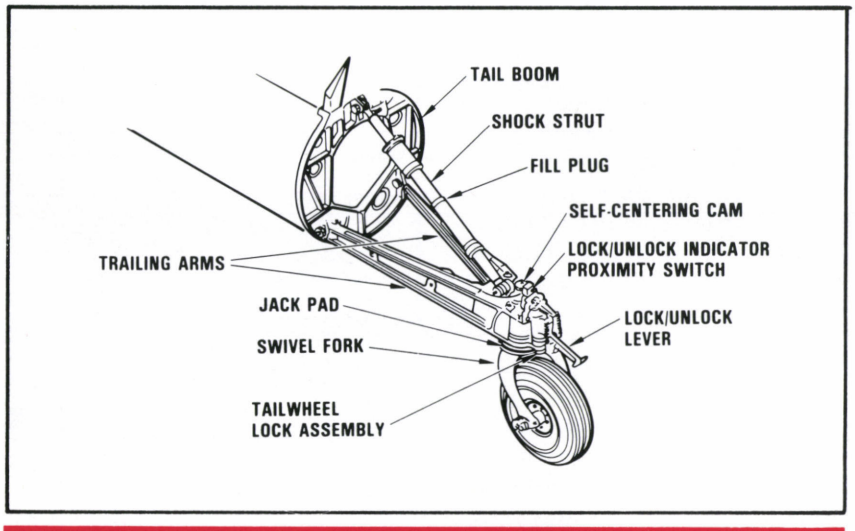

FIGURE 7: Tail landing gear.

for the tail rotor drive shaft, vertical stabilizer and tail wheel. Avionics equipment may be mounted here also, and there is provision for storage of flyaway and survival equipment.

The vertical stabilizer (figure 5) is composed of four sections, and to it are mounted the drive shafts, the tail rotor gearbox, the stabilator and the intermediate gearbox.

The main landing gear (figure 6) trailing arm assembly is attached to the cross tube and is the primary support member of the landing gear; attached to it are the shock strut and wheel assembly.

The shock strut will absorb all of the energy generated by a 1,800 foot-per-minute vertical impact without sustaining damage to the fuselage.

The tail landing gear (figure 7), mounted on the aft end of the tail boom, has a "V" shaped trailing arm and an air/oil strut serviced with dry nitrogen and hydraulic fluid. A swivel fork provides a mount for the tail wheel; the fork and tail wheel are 360-degree free-swiveling and self-centering. A hydraulic unlocking mechanism actuated by the pilot is used for positive tail wheel swivel unlock; the swivel lock is spring loaded to the trail position.

A disk-type brake system is installed on the main landing gear. Master brake cylinders are attached to the directional control pedals in both crew stations. The brakes are capable of holding the aircraft on a 12-degree longitudinal slope at maximum alternate gross weight.

Either crewmember can apply the brakes or release them if the parking brake is set; but, only the pilot can set the parking brake handle. The brakes are applied by depressing the top portion of the directional control pedals.

Each wheel brake system is independent of the other wheel, although the pilot and copilot gunner have a common brake system to each wheel.

The parking brake system is set by either crewmember applying and holding the brakes as the pilot pulls the parking brake handle.

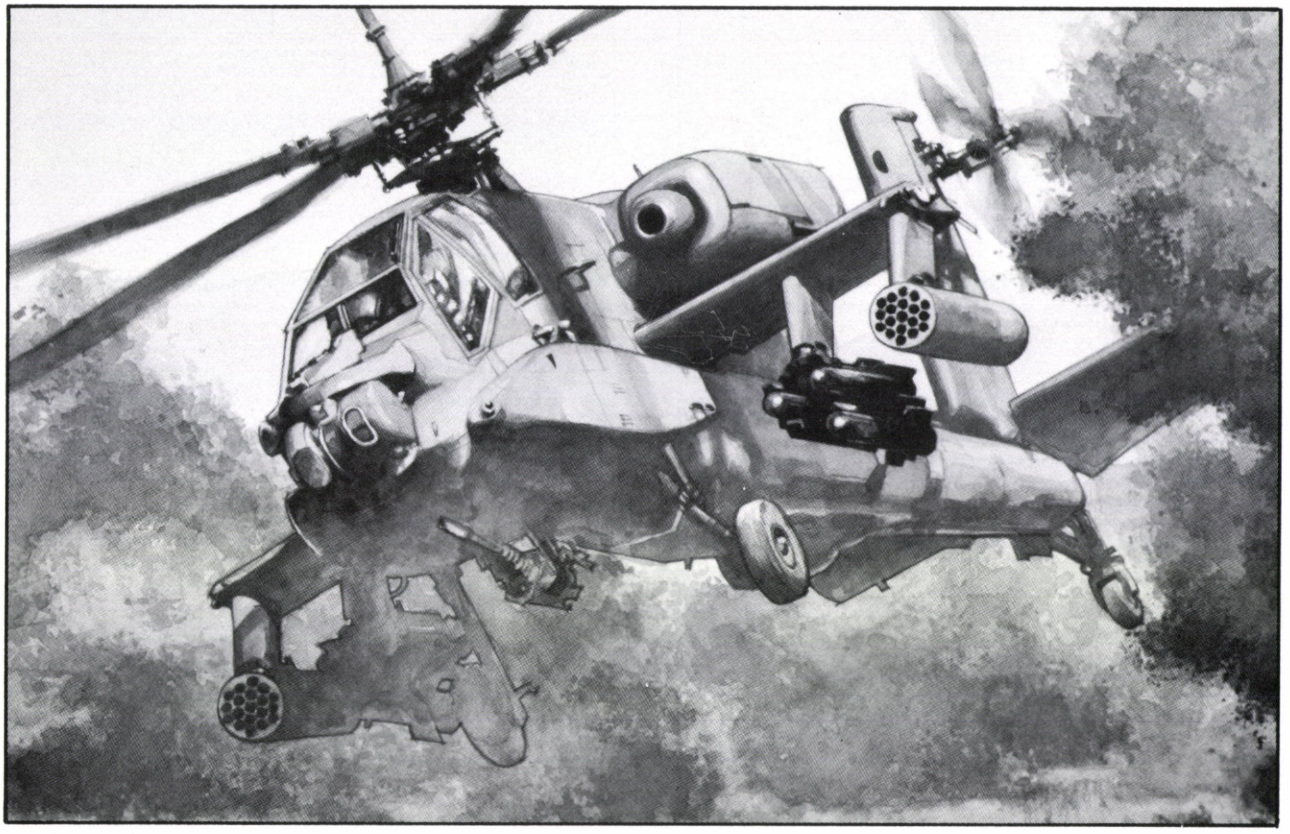

illustration courtesy of King Radio Corporation

Aircraft Survivability

The airframe is designed to absorb the following feet per second (fps)/feet per minute (fpm) crash impact forces to ensure survival of the aircrew:

- 20 fps (1,200 fpm)—longitudinally.
- 30 fps (1,800 fpm)—laterally.
- 42 fps (2,520 fpm)—vertically.
- 60 fps (3,600 fpm)—forward velocity with a 15-degree nose-down attitude.

The critical systems of the aircraft that have armor or blast/fragment protection are the drive and hydraulic systems.

The tail rotor controls, some upper main rotor flight controls (such as the mixer assembly), main rotor drive, main rotor head and the hydraulic actuator are not encased in armor, but they are sized and fabricated using ballistically tolerant material so that they can withstand a 12.7 mm API projectile impact.

All critical load-carrying bearings in the drive system are designed using electroslag resmelted (ESR) steel liners to protect them from 12.7 mm API projectile impact. Among these are 28 critical bearings in the main transmission, 4 main bearings in both the intermediate and tail rotor gearboxes, and forward and aft tail rotor drive shaft hanger bearings.

Since this is a dual engine aircraft and either engine can "carry the load," only light-duty ESR liners are used to provide protection for the engine nose gearboxes.

The 4½-inch diameter aluminum tail rotor drive shaft and the flex couplings are ballistically tolerant to a tumbled 12.7 mm API projectile.

Grouped near the rotor mast truss are the flight control hydraulic actuators that are made of ESR steel. The yaw control actuator is also made of ESR steel and is mounted on the tail rotor gearbox. Heat exchangers and air coolers for the hydraulic system are protected by selectively placed armor. Other critical subsystems, though not shielded, are redundant and separated to the greatest extent possible.

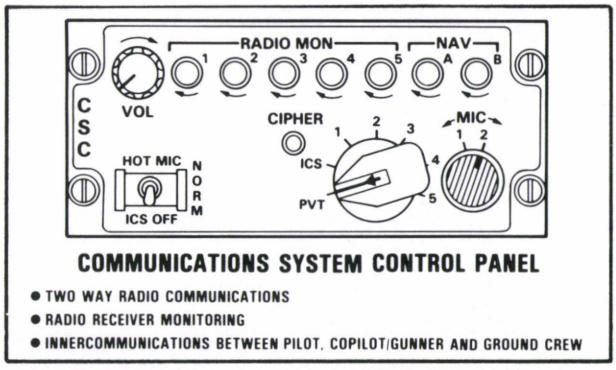

FIGURE 8: 10414/ARC.

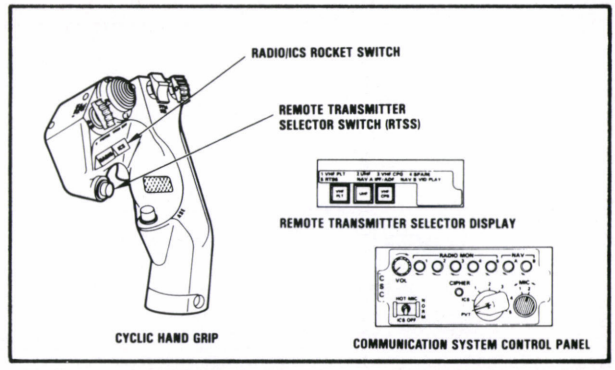

FIGURE 9: Pilot's remote transmitter selector.

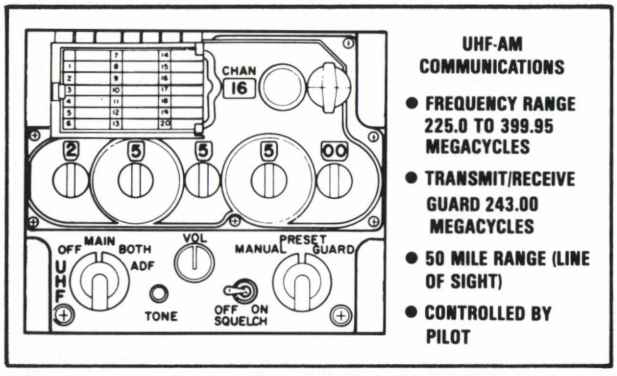

FIGURE 10: AN/ARC-164.

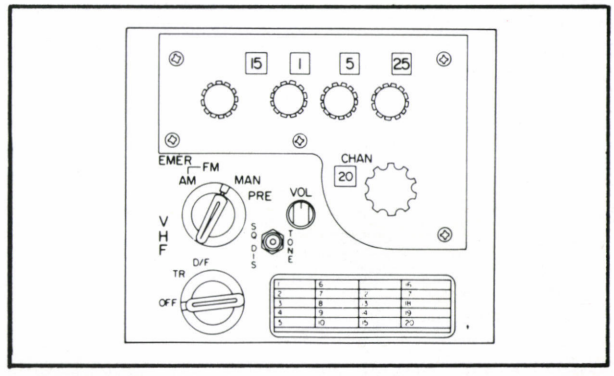

FIGURE 11: AN/ARC-186.

Communications Equipment

The intercommunications system (ICS) is controlled by two C-10414/ARC units, one for the pilot and one for the CPG (figure 8). Through the pilot's and CPG's integrated helmet units, foot switches and ICS radio cyclic rocker switches, the ARC's provide two-way radio communications, receiver monitor and intercom among the pilot, CPG and groundcrew.

A pushbutton on the pilot's cyclic stick grip controls the remote transmitter selector switch (figure 9). To operate, the ICS transmitter switch is placed in position 5 and the remote transmit selector switch on the cyclic hand grip is pressed. This automatically steps the transmitter switch to the next position and the radio connected to that position is indicated (illuminated) on the remote transmitter selector display. The radio/ICS rocker switch on the cyclic grip is used to transmit on the selected radio.

Located in the pilot's right-hand console, the AN/ARC-164 provides two-way ultrahigh frequency (UHF) amplitude modulated (AM) voice communication (figure 10). Both receivers are disabled during transmitter operation. Marked UHF-AM, the UHF radio transmitter and main receiver operate on the same frequency and are simultaneously tuned by frequency selector knobs on the panel. When the function selector switch is energized, constant monitoring is provided on the UHF distress frequency (Guard), regardless of the main receiver-transmitter frequency setting. The UHF automatic direction finder (ADF) is not in use yet.

Two AN/ARC-186 radios (figure 11) are installed in the Apache, one in the pilot's and one in the CPG's right-hand console. This is a two band, very high frequency-frequency modulated (VHF-FM) airborne radio set covering the frequency range of 30.000 megahertz (MHz) to 87.975 MHz (FM) and 116.000 MHz to 151.975 MHz (AM) in 25 kilohertz (kHz) steps, with a range of about 50 miles. There is an additional receive-only function from 108.000 MHz to 115.975 MHz (AM). The radio set has 20 preset channels, remote control and single antenna operation capability, and transmit and receive capabilities on the FM and AM Guard frequencies. It provides a retransmit function when connected to a second radio set. Secure communications in the base band mode are possible with use of the KY-28 or KY-58. FM homing will be possible when suitable external equipment is installed.

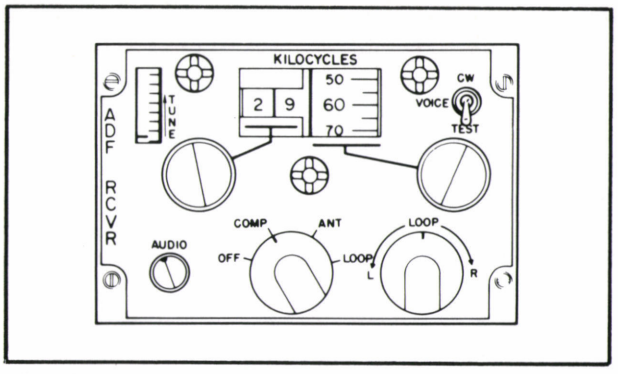

FIGURE 12: AN/ARN-89.

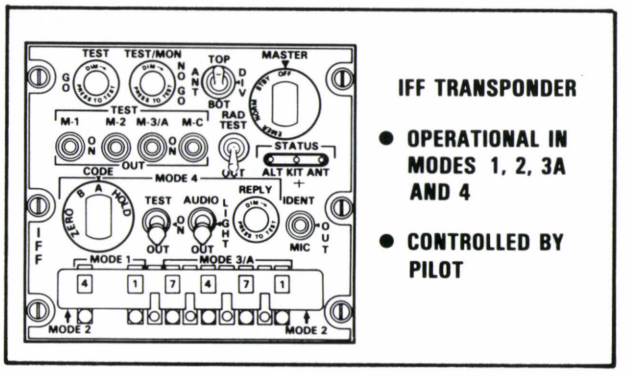

FIGURE 13: AN/APX-100.

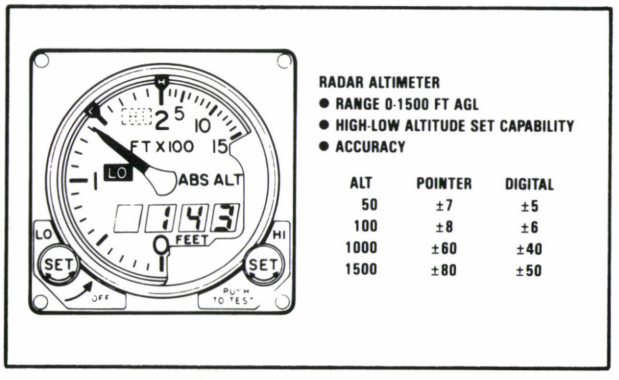

FIGURE 14: AN/APN-209.

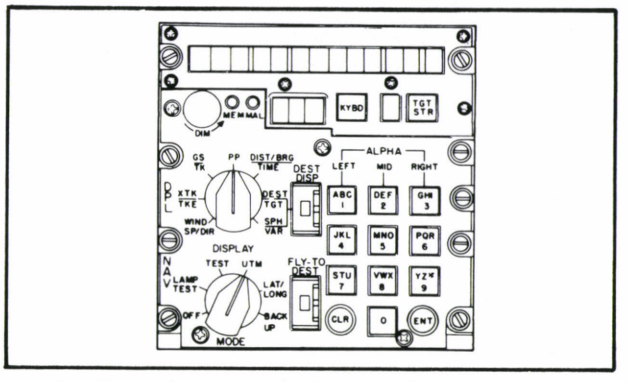

FIGURE 15: AN/ASN-128.

Navigation Equipment

Located in the pilot's right-hand console, the AN/ARN-89 direction finder set (figure 12) operating in the frequency range of 100 to 3,000 kHz, provides radio aid to navigation. When operating as an ADF the system presents a continuous indication of the bearing to any selected radio station and simultaneously receives audio signals from the station. In the manual mode the system enables the operator to find the bearing to any selected radio station by manually controlling the null direction of the directional antenna. Directional information is displayed on the pilot's horizontal situation indicator (HSI) needle 2, and on the copilot gunner's radio magnetic indicator (RMI) needle. The system also operates as a radio range receiver and a conventional low-frequency audio receiver to receive voice and other unmodulated transmissions.

Located in the pilot's right-hand console, the AN/APX-100 transponder (figure 13) provides automatic radar identification of the helicopter to all suitably equipped challenging aircraft or ground facilities within range of the system. The AN/APX-100 is operational in Modes 1, 2, 3A and 4 when KIT-1A is installed.

The radar altimeter, AN/APN-209 (figure 14), is located in the pilot's crewstation on the upper right portion of the instrument panel.

The CPG's digital automatic stabilization equipment multiplex (MUX) remote terminal unit transmits radar altitude information to the fire control system via the MUX bus.

There is a visual presentation on the radar altimeter when the helicopter is below "LO" or above "HI" settings. The range is from 0 to 1,500 feet above ground level.

The AN/ASN-128 lightweight Doppler navigation system (LDNS) (figure 15) consists of the computer display unit (CDU)—CP-1252/ASN-128, the signal data converter—CV-3338/ASN-128, and the receiver-transmitter-antenna—Radar RT1193/ASN-128.

The LDNS is a completely self-contained navigation system and does not require any ground-based aids. It provides worldwide navigation capability, with position readout available in both universal transverse mercator (UTM) and latitude/longitude (LAT/LONG). Navigation and steering are performed using LAT/LONG coordi-

nates. A bilateral UTM-LAT/LONG conversion routine is provided for UTM operation. Up to 10 destinations may be entered in either format. Present position data entry format is optional and independent of destination format.

The LDNS receives pitch, roll and magnetic heading inputs from the heading and attitude reference set (HARS). In conjunction with the HARS, the LDNS processes information to provide displays on the CDU.

The LDNS interfaces directly with the HSI and through the MUX with the fire control system, fault detection locating system and the HARS.

The air data sensor system (ADSS) provides air data information for fire control solutions, for digital automatic stabilization equipment functions and for stabilator scheduling (figure 16). The ADSS consists of the omnidirectional airspeed sensor (OAS) and the ADP.

An OAS is located on top of the ADSS standpipe (figure 16), which is attached to the top of the stationary mast. It rotates at a constant 720 revolutions per minute in the same direction as the main rotor and senses longitudinal and lateral airspeed and ambient temperature.

Located in the aft right-hand avionics bay, the ADP receives information from the OAS and pitot static system, processes this information and outputs it directly to the digital automatic stabilization equipment and to the MUX bus for use by other aircraft systems.

Data is processed and sent to the fire control system through the aft avionics MUX remote terminal unit (within the digital automatic stabilization equipment computer) via the MUX bus. This data includes:

- Ambient pressure,
- Air density ratio,
- Ambient temperature,
- Vertical airspeed,
- Total airspeed,
- Longitudinal airspeed, and

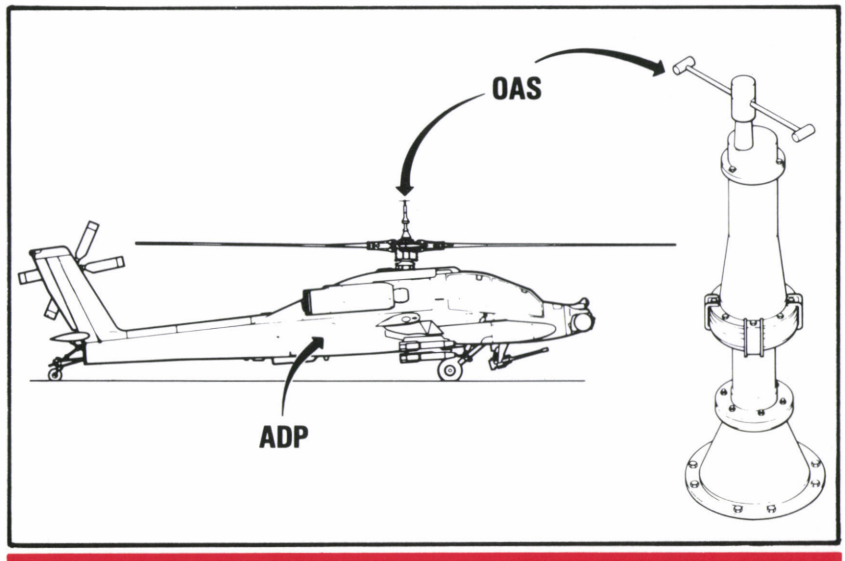

FIGURE 16: Air data sensor system components.

- Air data sensor and ADP built-in-test status.

The HARS system is composed of one line replaceable unit located in the aft avionics bay and a mode control panel located on the pilot's right-hand instrument panel. This system provides pitch, roll, magnetic heading, rate and acceleration information to aircraft systems. Output data of the HARS is used by the:

- HSI as magnetic heading,
- RMI as magnetic heading,
- Remote attitude indicator (RAI) as pitch and roll information,
- LDNS as pitch, roll and magnetic heading information,
- Digital automatic stabilization equipment as pitch and roll information, and
- Fire control system for use by the weapons systems.

The RMI, located in the CPG's right instrument panel, receives magnetic heading information from the HARS and displays this information on a rotating compass card. When HARS heading information is unreliable, an "OFF" flag will be displayed on the instrument.

The ADF pointer indicates direction to the station selected by the pilot.

The RAI located in the center of the CPG's right instrument panel can display aircraft attitude in pitch (±90 degrees) and roll (360 degrees): It receives pitch and roll information from the HARS. When this information is not reliable, the OFF flag appears on the face of the instrument.

The HSI is an electromechanical indicator (figure 17) that presents the horizontal view of the helicopter as related to the navigation situation. Located on the pilot's instrument panel below the turn and slip indicator, it interfaces with HARS, LDNS and the ADF. The display presentation of the HSI includes:

- A fixed aircraft symbol and lubber line to indicate the forward direction of the helicopter.
- Magnetic heading information from the HARS displayed by a rotating compass card.
- Selected course is manually set using the CRS (course) set knob.

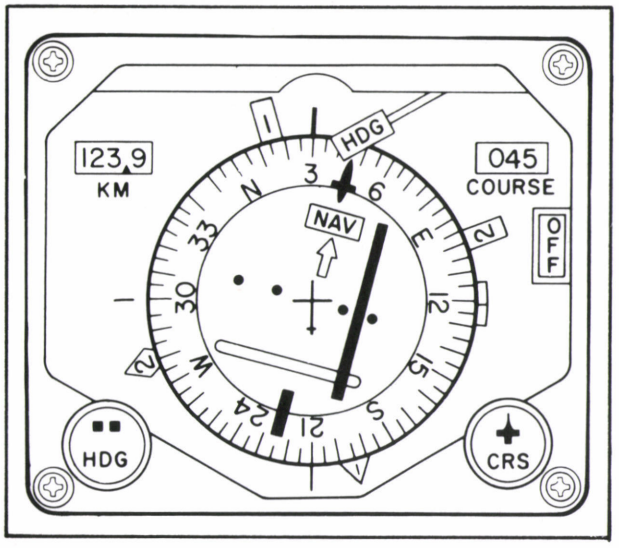

FIGURE 17: Horizontal situation indicator.

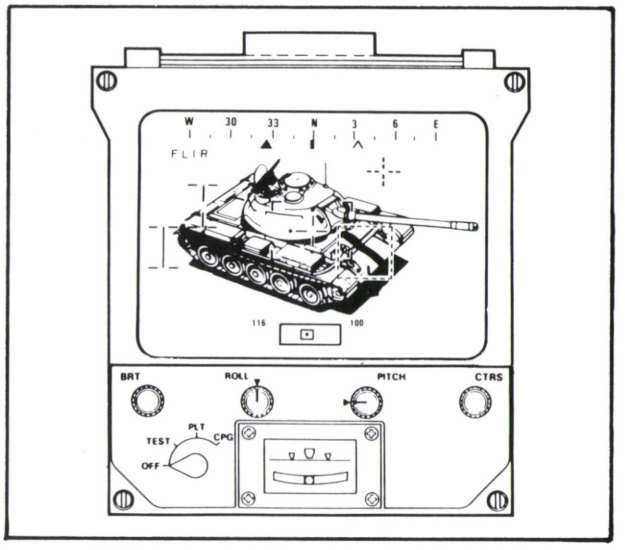

FIGURE 18: Copilot's target acquisition can be displayed on the pilot's video display unit.

Once set, the course pointer rotates with the card. Selected course is displayed as a digital readout in degrees in the upper right portion of the HSI.

- Selected heading manually set using the HDG (heading) set knob. Once set, the HDG marker rotates with the card.
- Course deviation information from the LDNS is indicated by the course deviation bar, which deflects right or left. The deviation bar is always parallel to the course pointer, and indicates when actual course differs from selected course.
- Bearing-to-destination information from the LDNS is indicated on the Number 1 pointer. This bearing is always relative to the aircraft magnetic heading.
- Distance to destination information from the LDNS is displayed as a digital readout in kilometers and tenths of a kilometer. This is displayed on the upper left portion of the HSI.
- The Number 2 pointer indicates the bearing to the selected ADF station.

The video display unit located in the top center of the pilot's instrument panel (figure 18) displays the video from either the pilot or CPG selected sensor, independent of the integrated helmet and display sight system.

The video display unit permits the pilot to have simultaneous display of the pilot night vision sensor (PNVS) video on the helmet mounted display, and CPG video on the video display unit.

In event of pilot helmet display unit failure, a limited night terrain flight capability is available by selecting PLT (pilot) video on the video display unit and placing the PNVS in the PNVS FXD (fixed) position.

Editor's note: Next month Part III will cover the Apache's auxiliary power unit and the T700-6E-701 engines. Copies of Part I (July 1986 issue) can be obtained by writing to Editor, *Aviation Digest*, P.O. Box 699, Ft. Rucker, AL 36362-5000; or call Commercial: 205-255-3178; AUTOVON: 558-3178; FTS: 533-3178.

ABOUT THE AUTHORS

Mr. Brunelle is responsible for the design, development and presentation of the Apache aircrew training courses as well as defining training device requirements, specifications, modifications and implementation.

He has more than 20 years of experience in aviation including instructional system background in both flight simulator and classroom environments. He is retired from the U.S. Navy and is a private pilot. Since joining McDonnell Douglas Helicopter Company in 1983, Mr. Brunelle has held positions in aircrew training and trainer engineering.

Mr. Mooney has been responsible for managing the marketing activities for the Apache and Defender helicopters since joining the McDonnell Douglas Helicopter Company in 1984.

He has more than 21 years' aviation experience in both rotary and fixed wing aircraft. Mr. Mooney's assignments included tours as a commander, aircraft maintenance officer, instructor pilot and aviation research and development program manager. He is retired from the U.S. Army.

U.S. Army Information Systems Command
ATC ACTION LINE

FLY NEIGHBORLY
Recording of Complaints

Mr. Robert C. Cole
U.S. Army Air Traffic Control Activity
Aeronautical Services Office
Cameron Station, Alexandria, VA

ARMY REGULATION (AR) 95-1, "General Provisions and Flight Regulations," addresses the U.S. Army Fly Neighborly Program and the requirement for aviator participation. An important part of this program is met through the provisions of AR 200-1, "Environmental Protection and Enhancement." This regulation and the Fly Neighborly Program recommend methods to reduce the noise impact caused by aviation activities. The installation compatible use zone (ICUZ) program provides information on how and where the noise impacts the community. This cause and effect relationship makes these two programs almost inseparable. Both are designed to alleviate "noise problems."

AR 200-1 directs installations to record and investigate complaints concerning environmental noise. Many installations follow this directive, but, only a few have systematic methods of recording complaints. Thus, much valuable information on the source of annoying environmental noise, and the location from which the noise complaints originate, are lost or scattered among various offices. Installations should establish systematic methods to record information and (more importantly) to obtain useful information from citizens who complain about environmental noise. This information is quite useful in the preparation of the ICUZ program, *which installations should be establishing*.

Noise complaints normally are received by an installation's public affairs office (PAO), which is responsible for ensuring that complainants are aware of the installation's mission and informing them that every effort will be made to correct the problem—mission and safety permitting. The PAO routes complaints to the office having responsibility for the type of activity that created the noise complaint. Regarding Army Aviation, this normally is range control or airfield operations.

The PAO will require a response from the affected activity for the purpose of providing information to the complainant. PAOs should provide a copy of the response to the Directorate of Engineering and Housing (DEH), which has overall responsibility for the environmental program. The DEH can provide technical assistance to the PAO and the installation's activity causing the noise.

The noise generating activity will complete a follow-up by identifying the cause of noise and any action taken to correct the deficiency. Corrective action often means changing runway usage, flight approach and departure routes, and such procedures as air traffic control operations to shift aviation impacts away from noise sensitive areas. If corrective action is inappropriate, a short concise reason will be provided. A copy of the follow-up will be provided the PAO and DEH for their files. This data allows trends and trouble spots to be identified. By coordinating programs, to include PAO, DEH and aviation assets at the installation, the Army is doing its best to resolve complaints at local levels and to enhance both the Fly Neighborly and ICUZ programs.

Questions, comments or responses regarding the Fly Neighborly Program should be directed to Mr. Robert C. Cole, AUTOVON 284-7796/6304.

Correction: The last line of the April 1986 ATC Action Line was inadvertently dropped at final printing. It should read: . . . *to be announced at your "new" destination.*