USAARL
SCI SUPPORT CENTER
P.O. BOX 620577
FORT RUCKER, AL 36362-0577

UNITED STATES ARMY
APRIL 1975

AVIATION DIGEST

UNITED STATES ARMY AVIATION DIGEST

APRIL 1975 VOLUME 21 NUMBER 4

4

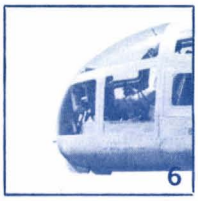
6

8

47

Pass In Review, Frank L. Alverson Jr. and CPT Joseph L. Pike 1
CH-47 Modernization Program, MAJ W. E. Keller 4
Tilt Rotor Aircraft, COL Joseph Rutkowski 6
Honduras Disaster Relief Operation, CW2 Jack M. Grass 8
The SHOTGUN Is Here! LTC George L. O'Grady 10
SEAS/COEA, MAJ David J. Antonoplos 14
Development Trends—1975 16
CH-47 Questionnaire 21
Army Airmobility R&D Laboratory 24
Views From Readers/Standardization Corner 26
Survivability—Key To Staying Power, CPT Thomas Hanlon 28
Applied Technology For Tomorrow's Aviator, Steve Kimmel 29
"Missile! Missile! Missile!" 30
POWs And Life Support Equipment, LTC Charles A. Lehman 34
System Safety—A New Doctrine For A New Era, LTC William F. Gabella 38
Good Idea 42
Pearl 47
USAASO SEZ 48

VANGUARD OF FREEDOM
BICENTENNIAL 1775-1975
UNITED STATES ARMY

MG William J. Maddox Jr.
COMMANDER
U. S. ARMY AVIATION CENTER
A major activity of the
U. S. Army Training and Doctrine Command

COL Norman W. Paulson
COMMANDER
U. S. ARMY AGENCY FOR AVIATION SAFETY
A major activity of the
Inspector General and Auditor General
of the U. S. Army

Richard K. Tierney
EDITOR
U. S. ARMY AVIATION DIGEST

ABOUT THE COVER

Today's plans are the "blueprint" of the future. They reveal the direction Army aviation is heading. This issue concentrates on various study groups that are helping to determine that direction. Cover by M. Dorough

The mission of the U. S. ARMY AVIATION DIGEST is to provide information of an operational or functional nature concerning safety and aircraft accident prevention, training, maintenance, operations, research and development, aviation medicine and other related data.

The DIGEST is an official Department of the Army periodical published monthly under the supervision of the Commanding General, U. S. Army Aviation Center. Views expressed herein are not necessarily those of the Department of the Army or the U. S. Army Aviation Center. Photos are U. S. Army unless otherwise specified. Material may be reprinted provided credit is given to the DIGEST and to the author, unless otherwise indicated.

Articles, photos, and items of interest on Army aviation are invided. Direct communication is authorized to: Editor, U. S. Army Aviation Digest, Fort Rucker, AL 36360.

Use of funds for printing of this publication has been approved by The Adjutant General, Headquarters Department of the Army, 8 April 1974, in accordance with AR 310-1.

Active Army units receive distribution under the pinpoint distribution system as outlined in AR310-1. Complete DA Form 12-5 and send directly to CO, AG Publications Center, 2800 Eastern Boulevard, Baltimore, MD 21220. For any change in distribution requirements, initiate a revised DA Form 12-5.

National Guard and Army Reserve units under pinpoint distribution also should submit DA Form 12-5. Other National Guard units should submit requests through their state adjutant general.

Those not eligible for official distribution or who desire personal copies of the DIGEST can order the magazine from the Superintendent of Documents, U. S. Government Printing Office, Washington, D. C. 20402. Annual subscription rates are $15.70 domestic and $19.65 overseas. Single copies are $1.35.

PASS IN REVIEW

A careful evaluation of the threat for this timeframe suggests that considerable improvement is necessary in the areas of aircraft survivability, weapons effectiveness, performance, reliability, availability and maintainability

Major Frank L. Alverson Jr.
Captain Joseph L. Pike

Systems Division
Materiel Developments Department
Deputy for Developments
U.S. Army Aviation Center

THE TITLE, "PASS IN REVIEW," is an acronym for Priority Aircraft Subsystem Suitability Intensive Review. This is a special study group established by the U.S. Army Training and Doctrine Command (TRADOC) at the U.S. Army Aviation Center, Ft. Rucker to conduct a user's review and tradeoff analysis of all subsystems and product improvements applicable to the AH-1 helicopter. The ultimate goal is to determine recommended AH-1 HueyCobra combat configurations.

Aviation Center members have been joined on the study group by representatives from the Armor, Infantry and Field Artillery Schools, MASSTER (Modern Army Selected Systems Test, Evaluation and Review), and the Combined Arms Center. This is of particular significance when consideration is given to the Cobra's existing limited performance capability and the fact that it is scheduled to be in the Army's inventory through the 1980s. A careful evaluation of the threat for this timeframe suggests that considerable improvement is necessary in the areas of aircraft survivability, weapons effectiveness, performance and forward area ruggedness (FAR).

The study is being accomplished in three phases during an approximate 6 month period. Phase I, which was initiated last November was primarily dedicated to determining the scope, approach and methodology to be used. The Armor, Infantry and Field Artillery Schools were tasked to develop individual positions on current and projected use of the AH-1 and to develop mission profiles. These profiles

PERFORMANCE COMPARISON

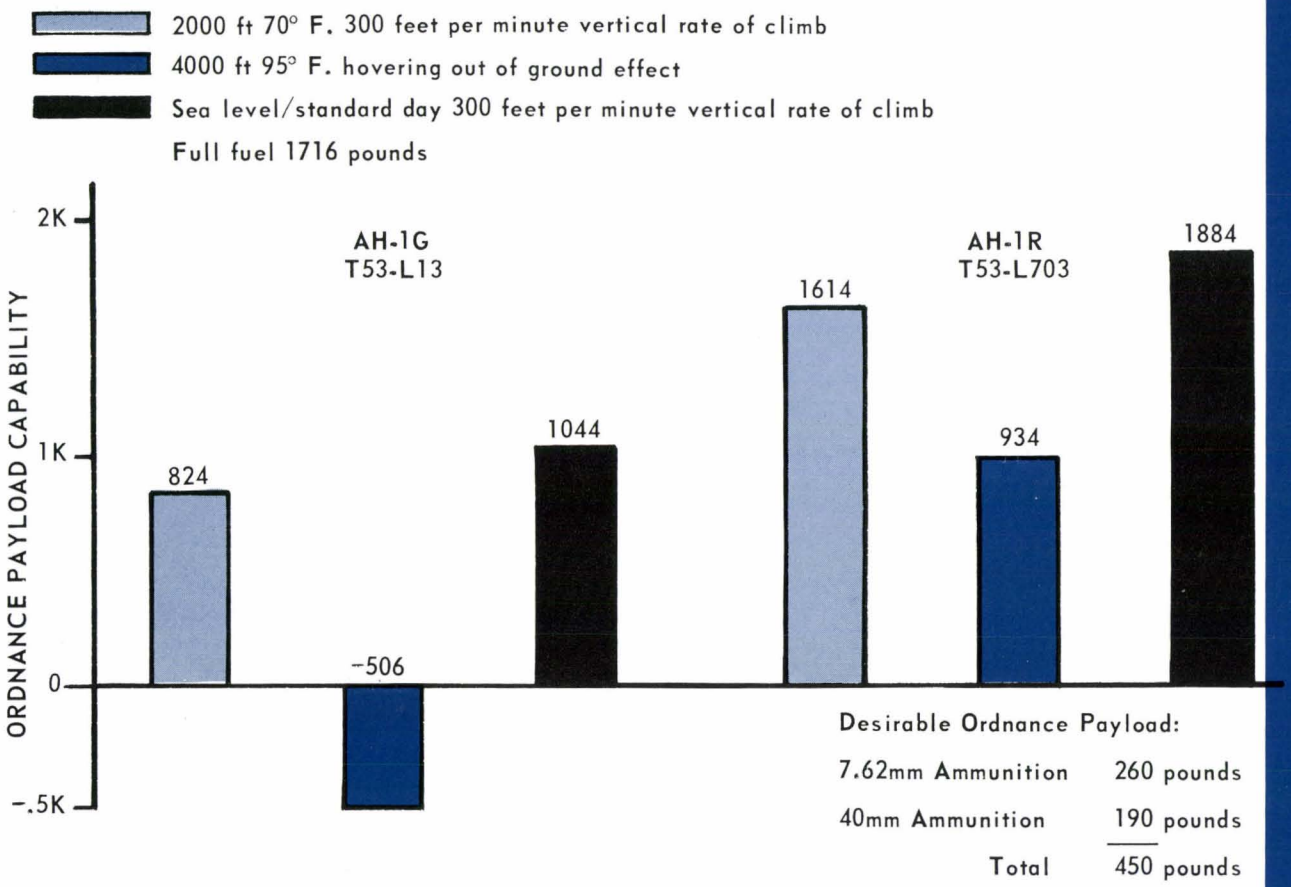

are to be integrated into the TRADOC Scenario Oriented Recurring Evaluation Systems (SCORES) process and will serve as a basis for future decision making.

Due to an early suspense, a recommendation during Phase I was the reconfiguration of the AH-1G to AH-1R. The AH-1R is to be equipped with a new engine, the Lycoming T-53-L703, rated at

DA APPROVED PRODUCT IMPROVEMENTS AND SPECIFICATION WEIGHTS

WEIGHT	
+ 6.5	Flexbeam Tail Rotor
+ 5.0	ICAM Engine
+55.5	ICAM Airframe & Dynamic Components
+50.0	Low Glint Canopy
+ 1.0	Closed Circuit Refueling
+40.0	Feathering Bearing (Elastomeric)
+ 6.0	Fire Detection System
+ 1.0	Engine Deck Panel
+ 1.0	Ni-Cad Battery Monitor
+15.0	ILS/VOR Navigation Radio
+25.0	IFR Generator
+ 8.3	APR-39 Radar Warning Receiver
+12.0	ARC-114 FM Radio (2nd FM)
+10.0	Radar Altimeter
+60.0	IR Suppression, Hot Metal Plus Plume
- 4.0	Anti-torque Controls (Aft Section)
- .06	Circuit Breakers (Switch Type)
292.24 lbs.	

LATEST AIRCRAFT SURVIVABILITY EQUIPMENT

EQUIPMENT	GOAL WEIGHT	MAXIMUM WEIGHT
Infrared Suppressor	40	45
Paint	10	10
Radar Warning Receiver*	13	13
Low Glint Canopy	25	30
Infrared Jammer	20	20
Missile Launch Detector & Flare	21	26
Chaff	33	33
Laser Detector	10	15
Advanced Radar Warning Receiver*	13	13
Engine Lube	19	19
Flight Control	26	26
Total	217	237

*Only one of these will be installed on the aircraft at the same time.

1,800 SHP (shaft horse power); the AH-1J transmission; gear boxes; and improved dynamic components. This recommendation was based on the obvious requirement for improved agility and maneuverability to offset the degradation in performance that will result from the additional weight imposed by the improvements. Projected flight performance improvements to be realized from these changes are near 50 percent.

Phase II could be quite appropriately called the hardware phase for it is during this timeframe that the Army Materiel Command (AMC) and industry briefed the study group on what equipment is available or will be available in the immediate future to fulfill Army needs. In all, there are some 19 product improvement proposals that already are approved for the Cobra and a number of others envisioned. The total weight of the currently approved programs is about 292 pounds. The briefings for this phase were held last February with AMC presenting pertinent data on development projects that encompassed such items as navigation equipment, fire control and armament subsystems, laser locator designator, HELLFIRE, anti-ice systems and the inflight escape system.

Industry representatives also briefed the study group last February and March on proposed equipment being developed within the R&D (research and development) community. Here, there are numerous items of equipment all of which are vying for a position in an already space-limited cockpit. A few of the items being considered are: radar altimeter, AH-1J antitorque controls, flex beam tail rotor an ILS/VOR (instrument landing system/very high frequency omnidirectional range) package, battery monitor and a second generator. An adequate suit of ASE (aerial survivability equipment) must be determined from the many items available, i.e., infrared (IR) supressor, IR paint, IR jammer, radar warning receiver, low glint canopy and vulnerability reductions to the engine and transmission that will allow them to operate for a minimum of 30 minutes without lubricants. All of these items of equipment must be meticulously scrutinized for their space, weight, power, cost and effectiveness. The proper measures of effectiveness must be adequately evaluated against the appropriate threat.

NEXT MONTH . . .

The DIGEST takes a close look at one of the vital areas of the Pass In Review study—The "Up-gun Dilemma"

Phase II of this effort will culminate with a solid users' requirements document (required operational capability or ROC), for an effective AH-1R/S that will be capable of operating and surviving in the high threat environment of conventional warfare.

The study group is due to complete its action by the 30th of this month. The coordinated ROC should provide impetus within AMC and impact the proposed new buy of 305 AH-1 Cobras slated for the 1977-80.

CH-47 Modernization Program

Major William E. Keller
Office of the Deputy for Developments
U. S. Army Aviation Center, Ft. Rucker

IN APRIL 1972, the Department of the Army (DA) reviewed alternatives available for modernization of the CH-47 inventory. Since the CH-47 (347) was one of the alternatives, DA tasked the Army Materiel Command (AMC) to provide analysis and recommendations to include cost, technical feasibility and evaluation of major components that could be applied on separate product improvement programs (PIPs) to the CH-47 aircraft.

The analysis was completed in April 1972 and concluded that the proposed modernization program was technically feasible and could realize life-cycle cost savings. However, the 347 aircraft provided an operational capability that exceeded the approved military characteristics for the medium transport helicopter. Therefore, a materiel need (product improvement) was required to implement the modernization program.

In August 1972, DA stated that the conclusions and recommendations reached in the April U.S. Army Aviation Systems Command (AVSCOM) study were considered valid. However, the Army could not support a CH-47 modernization program that would significantly increase the lift capability of the medium lift helicopter. DA indicated that the basic guideline for a CH-47 modernization program would be the consideration of all elements of the CH-47-347 program that would contribute to safety of flight and forward area ruggedness (FAR) of the aircraft with no significant degradation of performance from the current CH-47C.

The Department of the Army then tasked AMC to prepare and submit to DA for approval a recommended CH-47 modernization program using the following guidelines:

- Consider component modernization that is low risk and can be applied without major structural changes
- Study changes related to improvements in maintainability, reliability and safety
- Retain basically the performance available in the current CH-47C aircraft
- Where possible, use the technology developed in the 347 program
- Consider conversion of CH-47A and CH-47B aircraft to the new configuration with a followon conversion of the CH-47C to arrive at a standard inventory
- Investigate the possibility of accomplishing a modernization program in conjunction with the depot maintenance program

A product improvement program for modernization of the CH-47A and B aircraft was submitted by AVSCOM to AMC in October 1972. This PIP effort included not only the aircraft modernization but also a FAR effort to improve the T55-L-11 engine and the T62 APU (auxiliary power unit). The AMC review of the PIP resulted in a recommendation to DA that the program, as submitted, should be neither approved nor funded in FY 74 because no firm requirement existed. However, the assistant secretary of the Army for research and development and the assistant secretary of the Army for intelligence and logistics re-

quested that AMC investigate specific component improvement programs for modernization as well as review other alternatives for updating the CH-47 fleet.

In December 1972, DA had tasked AMC to prepare and recommend a CH-47 component development program to include integrally lubricated transmissions, fiberglass rotor blades, etc., with potential application to the entire CH-47 fleet.

This program was prepared by AVSCOM and submitted to AMC in January 1973. It included:

- fiberglass rotor blades
- integrally lubricated transmissions
- modularized hydraulic system
- improved electrical system
- triple cargo hook
- advanced flight control system
- necessary flight test program

The program recommended that a current fiberglass blade research project (figure 1) be redirected from the "advanced geometry blade" (AGB) configuration to a more compatible and efficient CH-47 advanced technology rotor blade configuration.

Recognizing that there was no program to either replace or improve the existing medium lift helicopter fleet, and based upon the above AVSCOM studies, the commander of the U.S. Army Aviation Center recommended to DA in November 1973 that funding to begin this program be included in the FY 75 budget. He also stated that the Aviation Center would update the document for the CH-47 helicopter to meet Army requirements that could be anticipated through the 1980s.

Figure 1

Glass Composite Blades Allow Utilization Of Advanced Aerodynamics

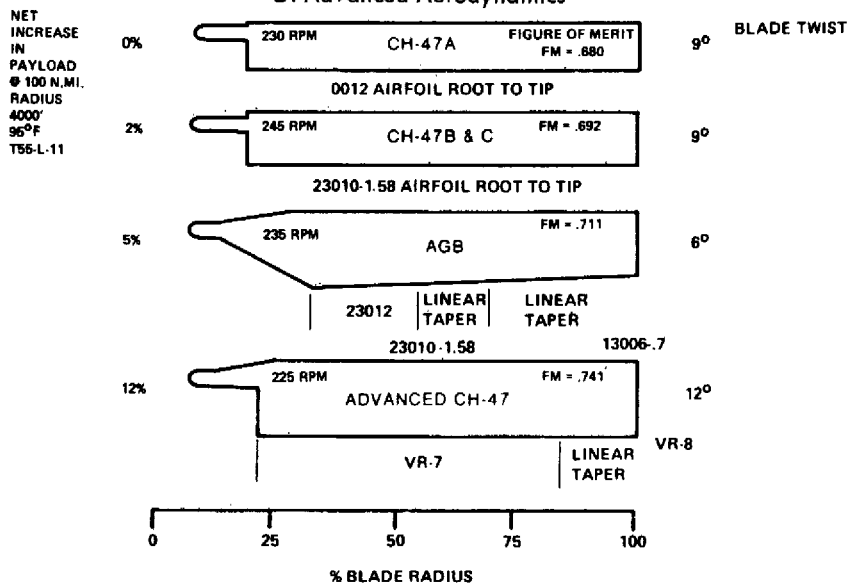

In December 1973, the Aviation Center prepared a proposed required operational capability (PROC) for modernization of CH-47 medium lift helicopters. A joint working group (JWG) meeting to coordinate the PROC was convened in January 1974, and subsequent to numerous coordination meetings between user representatives and the material developer the completed document was sent to the U.S. Army Training and Doctrine Command (TRADOC) for review. In March 1974, TRADOC forwarded the PROC to DA for approval.

In October 1974, the PROC for modernization of the CH-47 aircraft was approved by the chief of staff of the Army. In November 1974, DA directed TRADOC to form a special study group (SSG). TRADOC established the special study group and (AMC assigned the project manager position) in December 1974 with instructions to prepare the concept formulation package, development plan, decision coordinating paper and other necessary studies for an Army Systems Acquisition Review Council II and a subsequent Defense Systems Acquisition Review Council II in September 1975.

The age of the current CH-47 fleet requires that a program be established to sustain the required capability through the 1980s. In addition to the requirement to extend fleet life, there are significant maintainability, safety and reliability deficiencies which can best be overcome through a program of modernization rather than one of new development.

The CH-47C was expedited through development and into high-rate production to meet requirements in Southeast Asia. The CH-47A and B failed to meet current minimum lift requirements for a medium lift helicopter. Improvements are needed in flight safety, FAR, vulnerability and survivability in areas such as rotor blades,

Continued on page 18

Figure 2

CH-47 Drive System Integral Lubrication

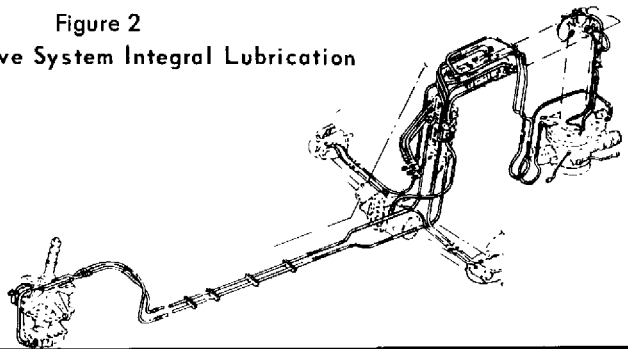

TILT ROTOR AIRCRAFT

Colonel Joseph F. Rutkowski
Director
Concepts, Doctrine and Organization
Deputy for Developments
U. S. Army Aviation Center

Above right: The second XV-3 built by Bell Helicopter Company. It was the first aircraft of its kind to achieve 100 percent inflight conversion of its tilting prop rotors (see "The Army Aviation Story, Part V," Oct 62 DIGEST)

Figure 1

Major Dimensions

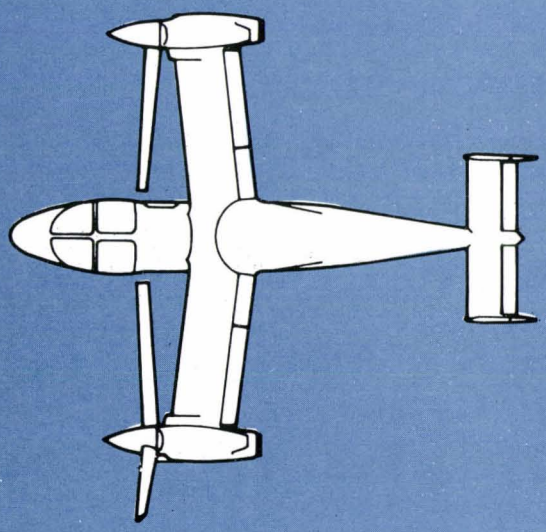

Overall Length	42 Ft, 11 In
Overall Height	15 Ft, 4 In
Wing Span	35 Ft, 2 In
Rotor Diameter	25 Ft

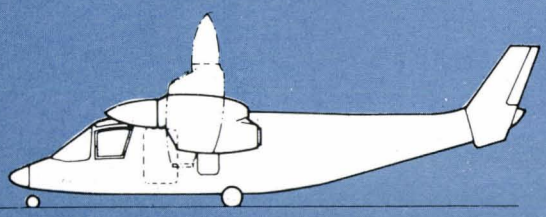

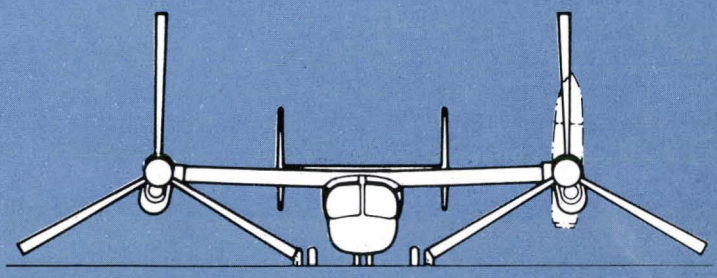

MORE THAN TWO decades ago Army aviators, along with Air Force and NASA (National Aeronautics and Space Administration) pilots, evaluated the XV-3 tilt rotor, an aircraft that has both rotary and fixed wing characteristics. The XV-3 uses wing-tip rotors that lift it vertically as a helicopter and then tilt forward to provide propulsion as a fixed wing aircraft.

Since the first evaluations, great technical advances such as turbine engines, lightweight and high strength materials, corrosion resistant materials, and limited capability "fly dry" transmissions have been achieved. Indications are that the use of such advances may offer greater capabilities for tilt rotor aircraft than was experienced with the XV-3.

In 1973 a joint NASA/Army $26.4 million, 4-year contract was awarded to Bell Helicopter Company to build two new research tilt rotor aircraft. A flight test program will be conducted to explore the tilt rotor concept. The program is designed to investigate performance, handling qualities and adaptability of the concept to Army needs of the future.

The new tilt rotor research aircraft has been designated the XV-15 and is shown in figure 1 in the fixed and rotary wing modes. The major dimensions and description of the research aircraft are provided in figure 2.

A tradeoff study, including a wind tunnel test, led to a decision to stow the main landing gear in pods. The pods cause an 8-to-9 knot drag; however, a good free fall capability for emergency extension of the landing gear offsets this penalty. A simplified fuselage structure decreased risk and saved some $200,000. A hovering simulation study was completed on a 6-degree of freedom simulator to obtain design data on the stability control augmentation system (SCAS) and single engine failure characteristics.

A study of the thrust/power management system has resulted in the incorporation of a standby failure system which automatically switches to the secondary channel when the channel goes outside of specified tolerance band. The hydraulic system has been designed so it will be possible to control the system even after the loss of the two primary systems.

The initial rollout date of the XV-15 is scheduled for late 1975.

Figure 2

Aircraft Description

Design Gross Weight	13,000 Lbs
Maximum Gross Weight	15,000 Lbs
Empty Weight	8,394 Lbs
Useful Load	4,606/6,606 Lbs
Rotor	Two, 25-ft diameter, 14-in chord, 3-bladed rotors with high twist advanced airfoils
Engine:	Lycoming LTC-1K-4K-Uprated T53 with a 1800 SHP rating
Transmission:	Advanced technology design with "fly-dry" capability up to 45 minutes after loss of lubrication
Fuel Capacity:	1,600 Lbs in crashworthy fuel cells in the wing

Honduras Disaster Relief Operation

CW2 Jack M. Grass
210th Aviation Battalion
Ft. Clayton, Canal Zone
PHOTOGRAPHS: MSG Floyd O'Neal

ANNUAL AWARD Monthly Winner CONTEST

ON 18 SEPTEMBER 1974, Hurricane Fifi struck northern Honduras; the torrential rains in her wake inundated the major agricultural areas. It is estimated that several thousand people died, and more than 25,000 were left homeless and without food or drinking water.

Part of the 210th Aviation Battalion mission is to provide disaster relief support to Latin America. At 1300 hours on 19 September, the Emergency Operations Center (EOC), 193d Infantry Brigade (CZ), alerted the 210th Aviation Battalion at Albrook Army Airfield to make necessary preparations to fly a Disaster Area Survey Team (DAST) to Honduras to assess the situation. Early on the morning of 20 September, three U-21 aircraft of the 352d Army Aviation Detachment departed the Canal Zone while UH-1H helicopters of the 114th Aviation Company (AH) were placed on alert for possible deployment to Honduras. The U-21 airplanes were the first U.S. military aircraft to arrive in support of the relief operation.

The U-21s flew the initial visual reconnaissance survey of the disaster area which revealed sand, debris and mud-buried villages; crops were inundated and devasted; roads, railroads and bridges were washed out; bodies of the dead were floating in the flood waters. Numerous persons were found clinging to the treetops and to the remains of dwellings as the raging flood waters continued to rise.

At 0330 on 21 September, EOC ordered the commitment of two UH-1H Hueys of the 114th Aviation Company to Honduras. At 0545 that morning, the Hueys departed Albrook Army Airfield. Onboard, in addition to the aircraft crews, were personnel of the 590th Maintenance Company (ACFT) who were to provide re-

quired maintenance support. The UH-1Hs with crews and maintenance personnel arrived that evening at San Pedro Sula, Honduras.

At first light on 22 September, the two UH-1H aircraft began relief work in the Sula Valley; the U-21s were used to conduct liaison with remote areas (most communications/power lines were destroyed), conduct rescue flights and transport medical supplies, personnel and equipment. For the first two days the U-21 aircraft provided the principal means of communications between Honduras and the Canal Zone, using the high frequency radios onboard the aircraft.

Helicopter work appeared monumental; as a result, the 210th Aviation Battalion pilots concentrated their efforts on evacuating children and injured personnel from high ground, roofs, and treetops, and in carrying food and medical supplies to pockets of isolated individuals and villages. These missions of rescue, evacuation and resupply of food and medicines continued through 5 October when extremely heavy rains once again destroyed many of the repaired bridges and roads. The 210th Aviation Battalion was again alerted to ready six additional UH-1H helicopters, and on 7 October four were dispatched to Honduras, arriving some 13 hours later.

Heroic acts were numerous for the 210th Aviation Battalion, and records were frequently broken. Night medevacs were conducted during adverse weather conditions and accounted for numerous lives being saved. One rescue operation netted 46 men, women and children, thanks to experienced 114th aviators and crewmen. One pilot stated that due to the nature and urgency of the situation—and by taking advantage of low fuel conditions—they were able to increase their passenger capacity. In another instance, the sharp-eyed crew of a UH-1H returning to the La Mesa Airport from a resupply mission detected a flashing glitter of light from an isolated fragment of high ground in the distance. Landing to investigate, they found a pregnant woman in labor and a man with a serious head injury. Quickly loading both aboard, they departed for La Mesa and an awaiting ambulance. Twenty minutes later the baby was born.

On one long workday, one of the UH-1Hs moved in excess of 50,000 pounds of supplies in the Sula Valley. Two days later a staggering 61,700 pounds of supplies were moved by a different UH-1H crew in a single day. In all, the aircraft of the 210th Aviation Battalion carried over 1.2 million pounds of relief supplies, relocated or evacuated more than

Continued on page 27

Top photo, woman in critical condition would have died but for medevac mission. Other photos show damage and suffering caused by Hurricane Fifi as she passed through northern Honduras. This happy couple at the right had just been plucked from a rooftop in flooded Sula Valley

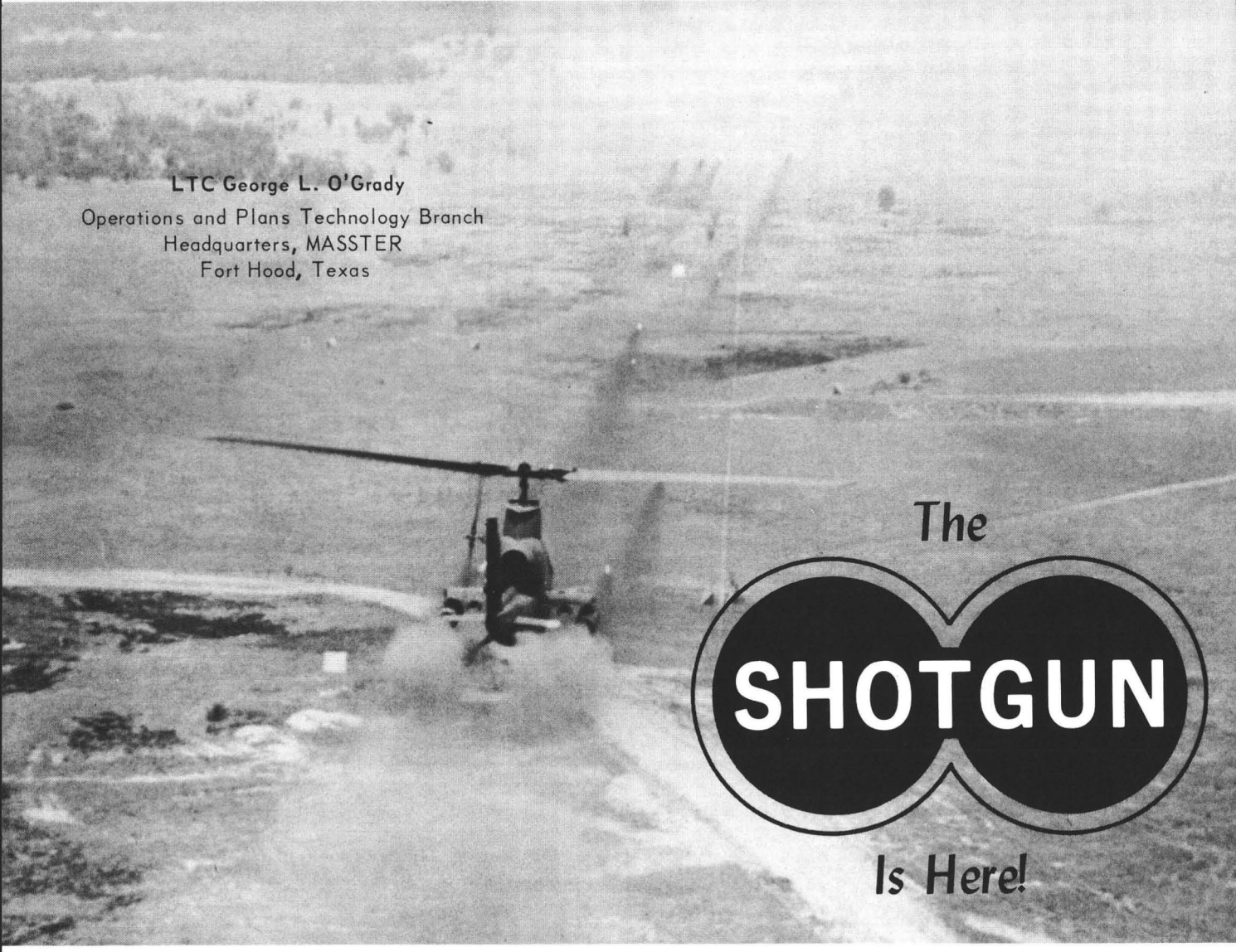

LTC George L. O'Grady
Operations and Plans Technology Branch
Headquarters, MASSTER
Fort Hood, Texas

The SHOTGUN Is Here!

THIS ARTICLE IS written in response to the excellent article "HELLFIRE" that appeared in the January 1975 issue of the DIGEST.

The author's analogy of using a shotgun to kill snakes and helicopters to kill tanks is outstanding. Unfortunately the author states there is no helicopter armament available that can be compared to the shotgun.

I would like to plead the case for the shotgun weapon that is available. As a matter of fact, it is a leading contender for being the most reliable weapon ever used on a helicopter. I refer to the 2.75 inch Folding Fin Aerial Rocket (FFAR). This rocket was used on armed helicopters in the 1950s and early 60s at Fort Rucker. It was used on practically every jury-rig weapon system on the UH-1As and received official recognition in the UH-1 series armament packages to include the XM-3, XM-16 and SM-21. It is considered standard armament on the AH-1 HueyCobra today.

The early 2.75 inch FFAR certainly had its problems. The six pound MARK I warheads (which were the only ones available in the 1950s and early 60s) were not optimum for the targets then encountered. Often, when the rocket was fired into a wet rice paddy, the fuze did not function; if it did it was so far below the surface, the weapon's effect could be equated to that of a 2.75 inch spear.

Accuracy was another major weakness. The original MK-4 motors were designed for high speed launch. When fired from a helicopter, they were very erratic. As a matter of fact when fired, if they all went in the general direction the helicopter was pointing, it was considered satisfactory. The MK-40 motor is a refinement of the MK-4 in that the exhaust nozzles are scarfed. This angle cut on the nozzles causes a low spin speed when the rocket is fired. The spin provides thrust alignment and the improvement in accuracy is significant.

Other rocket motor improvements have been considered. These include new fin assemblies, new nozzles and even new propellants. The Navy and the Air Force each have a new motor. The Navy has the MK-66 which employs a new "hotter"

propellant, a single exhaust nozzle and a wrap-around fin design.

Although the MK-66 is not in production, its big brother, the MK-71 is. The MK-71 is the standardized Zuni 5 inch rocket that can be fired from A-4s, F-4s and even the AH-IJ. The Air Force SR-105 is similar to the MK-4. It has a newer propellant that makes the rocket much faster. It has one serious disadvantage when considering helicopters—lots of smoke. Fire a few rounds and the launch vehicle is IFR (instrument flight rules). In a shootoff on high performance airplanes at ranges less than 3,800 meters, the MK-4, MK-66 and SR-105 were compared. The two new motors did reach the target faster and had a tighter dispersion pattern. The best rocket was the old MK-4. It was less expensive and target coverage was more even.

Helicopter rocket firing tests have been going on for years. The most current testing is the Selected Effects Armament System (SEAS) evaluation conducted at Yuma, AZ in the fall of 1974. Two of the SEAS contenders were the MK-40 and MK-66 motors for the 2.75 inch rocket.

It is quite possible that we may see one or more improvements to the rocket motor in the future. Any improvement will, of course, have to make a significant contribution to current performance and must be cost competitive with the current model. I guess we could build an extremely accurate rocket and include great sophistication, but we cannot afford to fire the gross national product downrange on every trigger pull.

New warheads, beyond the old six pound Mark I, are almost too numerous to mention. The standard today is the 10 pound M-151 high explosive. Other research includes the 17 pound HE (high explosive), flechette (8 gr, 20 gr and larger), smoke, dual purpose HEAT (high explosive antitank), inert, chemical illumination, flare and submunitions. These have been considered, experimented with and in some cases developed and deployed. A few are standard issue.

Perhaps the submunitions warhead deserves special mention. It carries several smaller warheads. Each small warhead is capable of penetrating the armor found on the tops of tanks. The warheads are multipurpose, thus target coverage as compared to unitary HE shows a marked increase. If the rocket is fired over the target and the fuze functions so that the submunitions are deployed in such a manner as to "rain down" on the target, then each single rocket could be considered nearly as effective as the number of submunitions carried. If six submunitions are carried, each rocket is worth up to six unitary warhead rockets. If 10 or more submunitions are carried, the single rocket is worth that many more unitary warhead rockets.

There are several other advantages for the submunition concept. When any ballistic weapon is fired nap-of-the-earth (NOE), if the trajectory is relatively flat, the impact beaten zone in the target area is very long. The dispersion may be so long that few rounds are contained in the target area, thus the weapon is not effective. Lots of rounds are fired but very few are on the ground in the target area. When using submunitions, this lengthened beaten zone does not exist. The round intentionally passes over the target. The fuze functions the round over the target, not long and not short. Now you can even afford some "sloppy" gunnery. Who cares if you aim a little too high? The fuze still functions over the target. One Cobra load is equal to several Cobra conventional loads! For a shotgun, that's a lot of buckshot.

Many pilots who have fired rockets will agree that the 2.75 is grossly inaccurate. *This is not true.* The project manager for the 2.75 conducted a very extensive base line test in 1971 and 1972 to define and attribute the various sources of error in the overall system. The system includes the rocket, rocket pod, aircraft (in this case the Cobra), the firing apparatus which includes intervalometers, wing stores management on the instrument panel and last, but not least, the pilot. A great deal of useful information was obtained. In brief, the ballistic error was found to be one of the smaller errors. Ballistic error cannot be controlled without modification of the rocket, i.e., change the propellant or something else. The other error sources can be identified and, using the basic elements of fire control, can be reduced. Other error sources include range estimation, relative wind, tip-off, trajectory shift and angular rate error.

Pilot range estimation at short ranges, out to 2,000 meters, is not bad. If a pilot were to set his sight at 1,500 meters, very little correction would be needed to fire at 2,000 or 1,000 meters. As range increases, radical sight settings are needed. At the same time, pilot range estimation includes a greater error. Several tests have demonstrated that at ranges of 3,000 meters and greater, the pilot's estimation of the range includes at least a 25 percent error. If the range was an actual 4,000 meters, the pilot would estimate 3,000 or 5,000 meters. The pilot needs a range-finder.

Relative wind is an error that is one of the most misunderstood of all. The 2.75 tends to orient itself into the relative wind. This phenomenon has been used to tactical advantage as far back as the armed UH-1B. Some pilots were confronted with

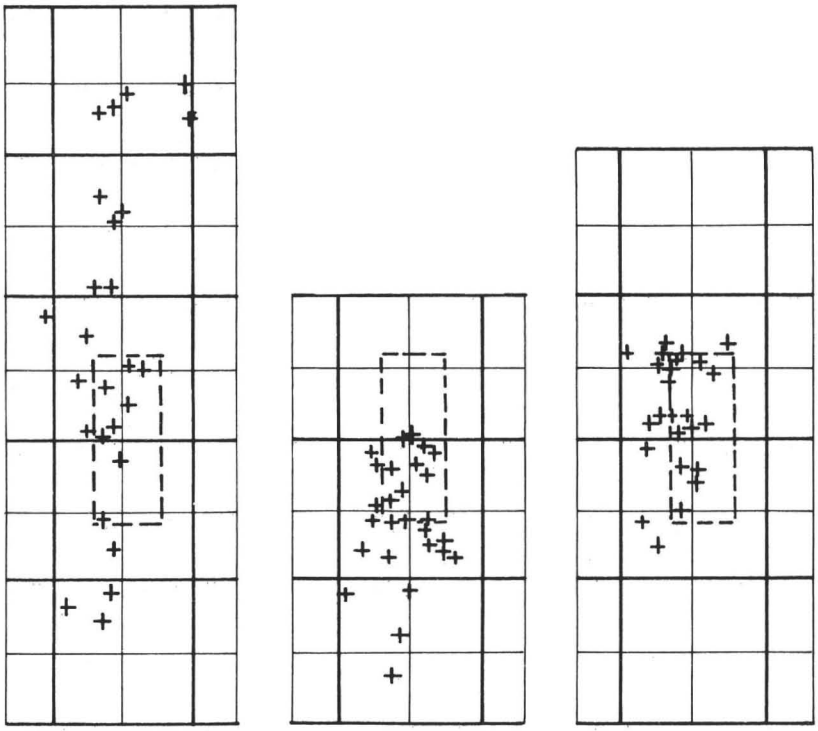

Range	2,500m	4,000m	5,500m
Beaten zone	945m by 238m	430m by 101m	362m by 178m

Figure 1

Standard AH-1G ripple engagement at 2,500 meters, 4,000 meters, and 5,500 meters

targets that require plunging fire to achieve the best effect.

Plunging fire with rockets may be hard to imagine. These pilots would overfly the target at high altitude (3,000 feet or better) and enter autorotation with skids level and a 2,500 fpm descent; they would fire rockets and "lo and behold" the rockets would plunge down away from the aircraft. This maneuver is not advocated because, even though the rockets go down, the firing cap goes up. This small metal disk which makes contact with the firing contact in the pod can tear large knife-like cuts in rotor blades. This example of relative wind is an extreme example. Lesser maneuvers than autorotation have less apparent effect, but effect is there. Further discussion of relative wind error is not needed since it is well covered in Chapter 2, FM 1-40, Helicopter Gunnery. The pilot needs some sort of relative wind sensor and display to predict the effect of the relative wind before firing. A sight with a moving reticle is one solution. More discussion on the sight will follow later.

Tip-off has long been an error source. Since the rocket pod tube diameter is larger than the rocket, the rocket can exit the tube with an error in any direction. If, for example, the first rocket exits the tube pointing above the axis of the pod and the second rocket exits the tube pointing right and down, these two rockets should move on divergent courses. In flight this does not happen because both rockets correct into the relative wind. Tip-off is one factor to explain why surface launched 2.75s scatter more than those launched in forward flight.

Other error sources include trajectory shift and angular rate error. Trajectory shift is covered in FM 1-40 but angular rate is not. If, for example, an aircraft is NOE and cruising any speed, say 40 knots, the nose is somewhat down. If the pilot wants to fire rockets at a long range he must pull the nose up. The nose is then in motion and that motion is imparted to the rocket. The speed of rotation will dictate the size of the error. Additionally, any motion between the target or target area and the launch vehicle can be measured as an angular rate. The rate is the error source. Zero rate, zero error. If the ballistic error is fixed and the other error sources can be reduced, the total error is proportionately reduced.

So far it has been stated the pilot needs a rangefinder, moving reticle sight and relative wind information. The external error sources can be stated as an equation, thus range information, relative wind and other error causing information can be fed to a computer which in turn drives the moving reticle

in the sight to show the pilot the predicted impact point if he fires. If the inputs to the computer are correct and the equation is correct when rockets are fired, they do fall at the predicted point. This is fire control. It is not a new subject. Other services have had aircraft weapons fire control for many years. The current Cobra Rocket Fire Control is a simple fixed-sight developed by the Navy for World War II. Fire control technology is here today. The real question is how much do we need? The more sophisticated and more complete fire control systems are prohibitively expensive. Those systems that we can afford may not do enough for us.

Major General William J. Maddox Jr., commander of the Army Aviation Center at Fort Rucker, recently flew and fired a sophisticated fire control system at Yuma. At 3,000 meters from the target, the general hit the target tank two consecutive times using the standard MK-40 rocket. Unfortunately, the cost of such a system may well equal 50 percent of the cost of the basic Cobra airframe. This can hardly be justified. Less sophisticated systems are being considered. Technological breakthroughs are being made daily so costs can be reduced on some components as much as a decimal place. It appears that some form of fire control is inevitable; however, we do not have it in the fleet today, nor will we for the next few years.

We do not have Cobras with TOW (tube-launched, optically-tracked, wire-guided) missiles in the field yet, but they are coming. HELLFIRE is even further down the stream. *We do have the 2.75 inch rocket today.* We must strive to make the most of what we have to work with. Tests have been run; experiments have been performed. Every experiment tends to prove we can do more with the current Cobra and existing rocket than imagined.

MASSTER (Modern Army Selected Systems Test, Evaluation and Review) has conducted a series of tests that show the rocket actually achieves better impact patterns at greatly extended ranges. Flat trajectory at low levels has a very long beaten zone. The steeper angle achieved at longer ranges results in shortened beaten zones (figure 1). Though the beaten zones are greatly reduced at extended ranges, note that the dispersion left and right remains a relative constant. Looking down on an assumed dispersion pattern, it should look as depicted in figure 2.

A gun dispersion pattern would tend to follow the dotted lines. It would appear the rocket pattern may be more effective than any gun at very extended ranges. It must be stated this pattern occurred at 90 knots forward flight. It may be different at 40 knots and would probably not be recognizable at a hover.

Consistent and acceptable impact patterns have been achieved at ranges from 3,000 meters to 5,500 meters. Maybe the maximum range can be extended to even greater ranges. The questions are being asked and tests will likely be run. Right now with training, any attack helicopter pilot can learn to employ the rocket effectively at NOE forward flight and at all ranges out to 5,500 meters.

Now that we have established a "shotgun" weapon for the Cobra or any other attack helicopter, let's look at that snake shot again. You know an area is heavily infested with snakes and you intend to use a shotgun on them. Do you see the snakes, or do you see the area, the brush, weeds, rocks and dead branches in which the snakes are hiding? Who cares? Fire! Let's question the attack helicopter pilot. You are informed an area 5,000 meters or more to your front is heavily "infested" with tanks. Do you see camouflaged tanks, or even moving tanks? Particularly at that range? Who cares? The area is defined . . . fire! Normally, ballistic rockets should not be employed singly or multiply on a single tank. That's for TOW or HELLFIRE type systems. The rocket is a complementary weapon and can be effective in conjunction with point fire weapons. The "shotgun" is here. *Let's use it!*

Figure 2

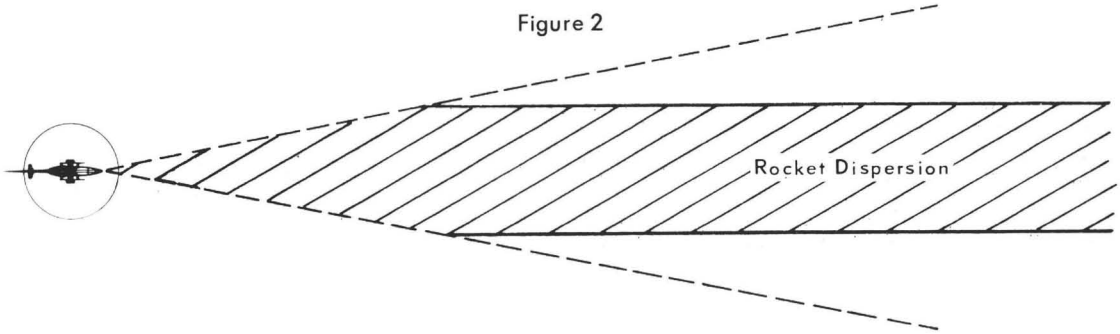

SEAS COEA

If you think the Army has gone NAVY you are mistaken. The SEAS in this case means Selective Effects Armament System. COEA means Cost and Operational Effectiveness Analysis

Major David J. Antonoplos
Project Officer
SEAS–COEA Study Group

THE SELECTED EFFECTS Armament System (SEAS) has returned to Ft. Rucker. Nine years ago at Ft. Rucker, the Combat Developments Command Aviation Agency, now Deputy for Developments, wrote the first requirement document for SEAS, an aerial free rocket system. The SEAS would be developed to replace the 2.75 inch rocket providing greater range, accuracy and lethality.

The year was 1965 and it was then recognized that the U.S. Army could gain a significant advantage on the battlefield with an improved aerial rocket system when used in the combined arms effort. These significant advantages would result from an increased aircraft standoff capability providing a greater degree of survivability, improved accuracy and the ability to select the type warhead and fuze to match the nature of the target, providing greater lethality.

In 1970, the proponency for the study was transferred from Ft. Rucker to the Field Artillery School because of the School's interest in aerial artillery weapons systems. Four years later, due to a phasing out of the aerial field artillery concept, the proponency for the SEAS study returned to the Aviation Center.

In the past 9 years, new materiel and materiel improvements have been the result of effort by the development community. The 2.75 inch rocket has undergone a product improvement program (PIP) to a point where it now is a contender in meeting the new requirements of increased range, accuracy and lethality. Two corporations have produced rockets to compete as a replacement for the 2.75 inch rocket. The Arrow rocket built by Northrop Corporation weighs about 48 pounds and has a maximum effective range of 6,000 meters. The ANSSR (aerodynamically neutral spin stabilized rocket) built by Emerson Electric weighs about 45 pounds and has a maximum effective range also of 6,000 meters. Each contending rocket system will have a flechette and submunition warhead which will provide greater efficiency and lethality; also they will be capable of incorporating stores management (selection of the rocket tube to be fired) and remote controlled fuzing. Each candidate rocket system has undergone test firing at Yuma test facilities so that effec-

SEAS Avanced Development Test Hardware—Fin-stabilized ARROW Round and Launcher

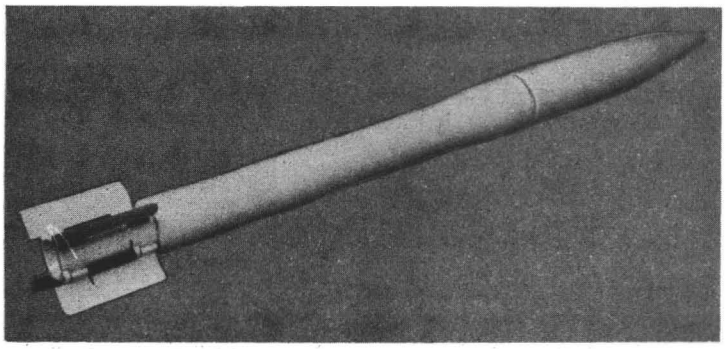

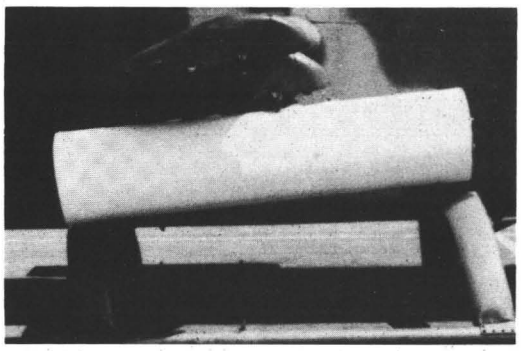

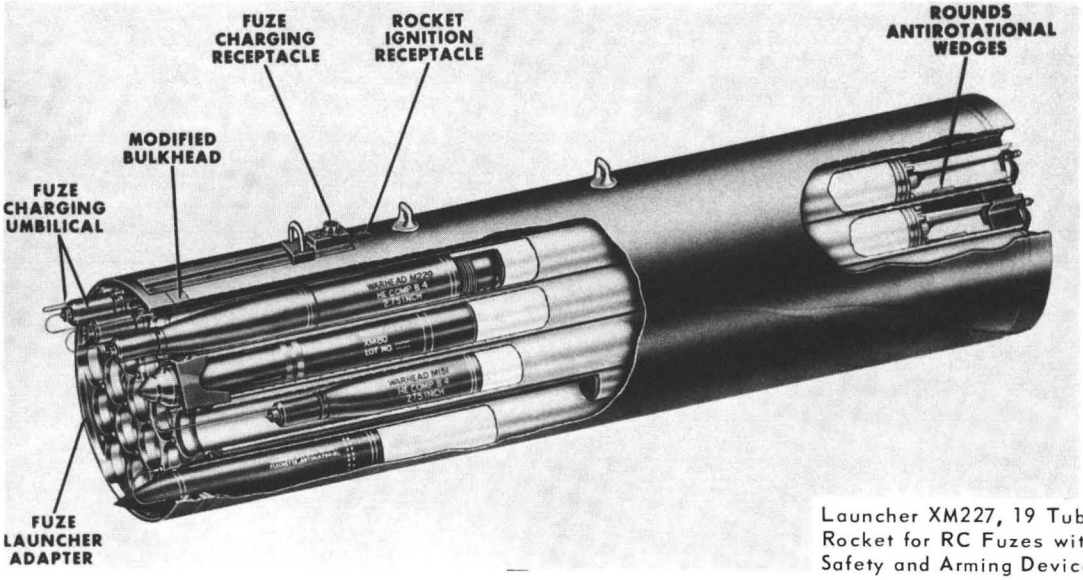

Launcher XM227, 19 Tube, 2.75 Inch Rocket for RC Fuzes with XM132 Safety and Arming Device

tiveness data could be compiled.

In an ongoing effort to provide the most cost effective aerial free rocket system, the Aviation Center is now conducting a Cost and Operational Effectiveness Analysis (COEA). This analysis will determine the operational effectiveness of each candidate and the essential characteristics when fired against appropriate targets in a standard scenario. Concurrently, the pertinent cost to develop fielding and employing each SEAS candidate system will be determined.

EXTERNAL AMMUNITION STORES MANAGEMENT

1. Select From a Minimum of Four Warheads
2. Select Single Rounds, Pairs or Quads
3. Variable Time Interval Between Successive Rounds During Ripple Fire
4. Visual Presentation of Rounds Remaining
5. Selective Jettison of Stores

Once these two steps are accomplished, the systems will be ranked on the basis of their cost and operational effectiveness relationship. The system which shows the most favorable relationship or the system which best meets the Army's need for an aerial free rocket will be the preferred system.

Some of the essential elements of analysis which will be answered are the different warhead effects on various type targets, attack helicopter survivability during the engagement of these targets, the effects of improving the fire control capability (with such items as laser rangefinder and fire control computer), the logistic impact of developing a new rocket and the impact each rocket candidate will have upon forward area refueling and rearming point operations.

The COEA will use measures of effectiveness which are quantitative indications of the ability of a human, human/materiel or materiel system (in this case an aerial rocket) to accomplish the task for which it was designed. The measures of effectiveness that will be used for the aerial rocket candidates are Red target killed, Blue aircraft lost, percent of rocket load expended per engagement and the percent of load remaining.

The COEA study is scheduled to be completed in September 1975. Then the final decision, based on the study recommendation and funds available, will be made as to which rocket system should be produced for use on present and future attack helicopters.

SEAS Advanced Development Test Hardware—Spin-stabilized ANSSR Round and Launcher

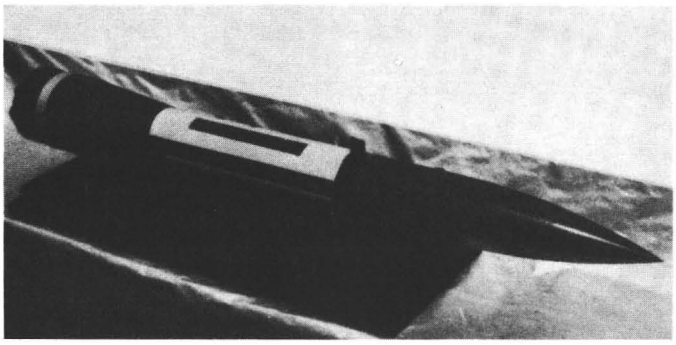

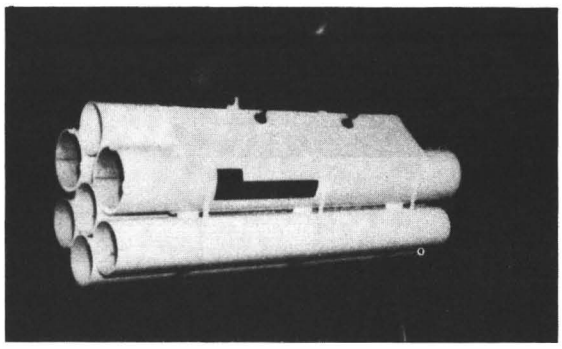

DEVELOPMENT

Hughes AAH

Boeing UTTAS

ADVANCED ATTACK Helicopter (AAH): The AAH is a twin-engine (General Electric T-700s) rotary wing aircraft designed as a stable, manned aerial weapons system capable of defeating a wide range of targets, including armored vehicles. It will provide responsive direct aerial fires as an integral element of the ground unit. In its primary mission configuration, the AAH will have a cruise speed of 150 knots with a payload of eight TOW (tube-launched, optically-tracked, wire-guided) missiles; 8,000 rounds of 30mm ammunition; 38 rounds of 2.75 inch rockets and fuel to fly 1.9 hours. This weapons system will contribute highly mobile and effective firepower to the antiarmor capability of the Army. Design capability includes HOGE (hover out of ground effect) at its mission gross weight, 500 feet per minute vertical rate of climb at zero airspeed, using less than 90 percent military rated power at 4,000 feet and 35 degrees C (95 degrees F). The AAH will become the primary attack helicopter of the 1980s and will be complemented by the improved AH-1 R and S Cobras (watch the DIGEST for more later). Contracts were awarded to Bell and Hughes on 22 June 1973 for Phase I, competitive Air Vehicle Engineering Development. In May 1974 both contractors had completed fabrication of their full-scale mockups. They now will fabricate one ground test and two flight test vehicles. Bell recently has completed construction of its first flight vehicle. Both contractors are anticipating prototype first flights in the fall of this year. Following government test and evaluation of the competitive vehicles, one contractor will be selected to perform Phase 2 (fabrication of three complete aircraft with total integrated subsystems). Due to funding constraints, the entire AAH Program has slipped some six months—delaying the Phase 2 contract award date until November. The first fully integrated subsystem aircraft is slated for its maiden flight in March, 1978.

Utility Tactical Transport Aircraft System (UTTAS): The UTTAS will provide the primary

TRENDS—1975

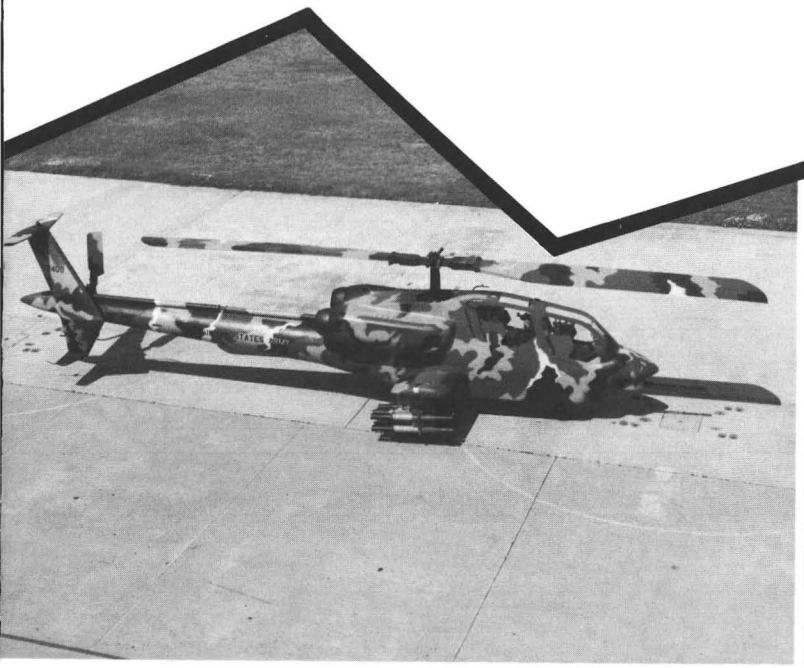

Bell AAH

Sikorsky UTTAS

means by which the Army will conduct airmobile operations in all intensities of conflict. This capability will enhance and extend the capabilities of ground commanders to initiate, conduct and sustain combat operations by providing the means for tactical air movement of troops, supplies and equipment at division or lower echelon. The UTTAS will be a squad carrier used primarily in forward areas for movement of combat troops in the assault plus their organic mission essential equipment. It also will resupply these units in combat. To satisfy this requirement, the U.S. Army has contracts with General Electric for the T-700 engine, with Sikorsky Aircraft Division of United Aircraft and with the Boeing-Vertol Company. Both contractors completed tests on their ground test vehicles and both performed shake tests. Sikorsky completed its first UTTAS flight test on 17 October 1974, and Boeing-Vertol on 29 November 1974.

A Materiel Needs Document Review Committee for UTTAS met last October and November to identify requirements that were to be either eliminated, changed, modified or looked at very closely in Developmental Test II and Operational Test II. Proposed completion dates on the UTTAS development schedule:

- Mockup Review, Sep 1973, completed on schedule
- Critical Design Review, Dec 1973, completed on schedule
- First Flight, Nov 1974, completed on schedule
- Complete 150-hour Military Qualification Test, Aug 1975
- Deliver Prototypes for Government Competitive Testing, Jan 1976
- Complete 300-hour Military Qualification Test, Aug 1976
- Complete 1,200-hour Military Qualification Test, Jun 1978

New Aviation Literature: In the publication field the U.S. Army Aviation Center, Ft. Rucker is developing a trilogy of manuals which are the basic documents that a unit needs for conducting its training and operations in the

Continued on page 23

CH-47 Modernization

Continued from page 5

hydraulic systems, lubrications systems, electrical systems and the load suspension system. Modification with these improvements will reduce combat and peacetime losses, decrease operating costs and improve external load operations. This modernization is required to improve the capability for low level and nap-of-the-earth (NOE) tactics and for instrument meterological conditions/night operations dictated by the postulated high air defense threat environment.

The technical risks associated with attaining the program objectives are considered low because current technology derived from research and development (R & D) programs is being applied. The fiberglass rotor blade design will incorporate techniques and technology derived from previous or existing R&D programs such as the Advanced Geometry Blade Program, Heavy Lift Helicopter (HLH) Advanced Technology Program, Utility Tactical Transport Aircraft System (UTTAS) Development Program and the Manufacturing Methods and Technology (MMT) Program for automated application of fiberglass tape. The transmission system and modularized hydraulic systems will apply technology derived from the HLH, UTTAS and other ongoing programs. The flight control system and dual cargo hooks have been developed and verified on CH-47 test aircraft. The improved electrical system and other FAR improvements use current technology.

More directly, by placing high emphasis on achieving increased subsystems reliability and maintainability, the modernized CH-47 will exhibit confirmed extended component life which will reduce maintenance manhours and replacement parts' costs and provide improvements in field availability. Considerable emphasis also will be placed on vulnerability reduction by incorporating the latest technology to facilitate early detection and recognition of possible trouble spots, thereby increasing survivability and crew safety.

In consonance with these goals the systems listed above will be modified.

The present metal blade is subject to spar and honeycomb corrosion. The blades are sensitive to small defects which can lead to further deterioration and create rapid failure propagation.

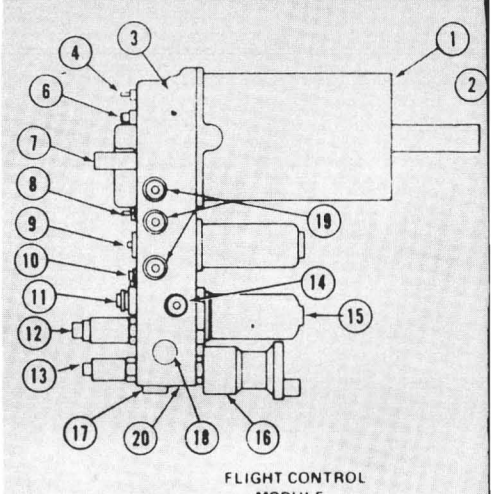

Figure 4

CH-47 Modularized Flight Control Hydraulic System

The new fiberglass blade will include provisions for deicing and corrosion resistance, and will incorporate an improved failure detection system. In keeping with the developmental goals, the noncorrosive fiberglass design will substantially increase the life of the blade, reduce maintenance and improve safety (figure 1).

The 5,000 HP (horsepower) transmission currently installed in the CH-47 fleet uses a central lubrication and cooling system, allowing for a possible 116 leak points. Additionally, magnetic chip detectors have not been as dependable as had been expected (figure 2).

The new 7,500 HP transmission also will be designed using technology gained from the HLH and UTTAS programs. This new design will reduce the number of leak points from 116 to 28. In addition, component parts will de-

Figure 3

CH-47 Drive System Integral Lubrication (Improved)

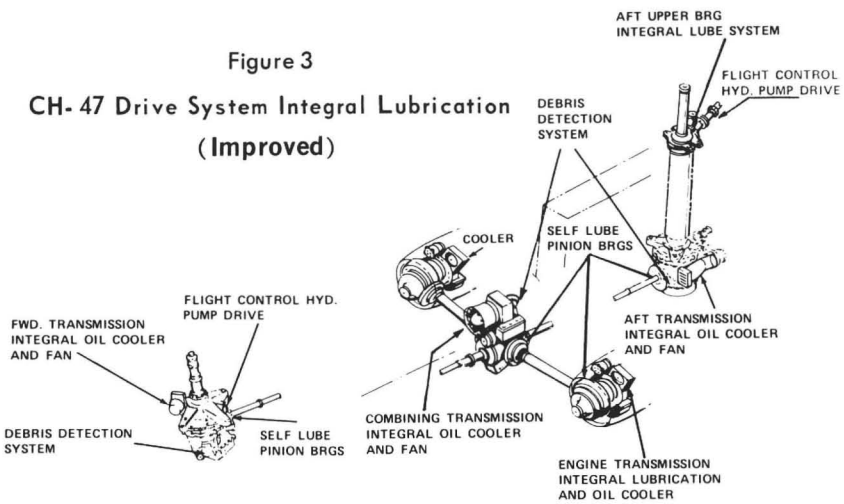

crease from 210 to 90. Design improvements are included within the gear and bearing area, improved gear steel is used, and better integral oil cooling and self-contained lubrication systems will be in evidence. This proposed transmission system will provide the capability of 2 hours of running time after loss of lubrication pressure and will provide an auxiliary lubrication system which will permit emergency operation for 30 minutes after complete loss of oil.

A newly developed full flow debris detector system will replace the present chip detectors. The new system will significantly reduce maintenance and decrease system vulnerability.

An example of the flight control portion of the present hydraulic system is shown in figure 3. It depicts all of the lines, hoses and fittings required for this portion of the system.

Figure 5 Hydraulic System Data

	TOTAL HOSES & TUBES	LEAK POINTS
EXISTING ACFT	520	1040
MODERNIZED	140	219
REDUCTION	73%	79%

A module concept is programed for installation in the modernized fleet. A typical flight control module is shown in figure 4. The use of modules eliminates many of the hydraulic lines, valves, filters and fittings which will significantly reduce the number of potential leak points. Each modernized CH-47 aircraft will employ five modules.

To illustrate the expected reduction in hydraulic lines and leak points due to modernization, a comparison of the existing hydraulic system with the module system is shown in figure 5. The modernized system will have a 73 percent reduction in total hoses and tubes which reflects an associated 79 percent reduction in leak points; these reductions are expected to significantly aid in achieving the development goals discussed earlier.

Several years of CH-47 operational experience in the field has resulted in the identification of several areas of needed improvement which should be incorporated into a modernized CH-47. Paramount among these necessary changes is a redistribution of wiring harnesses. All major electrical wires of the present CH-47 aircraft electrical system are located in a tunnel in the interior overhead

Figure 6 CH-47 Electrical System Improvements

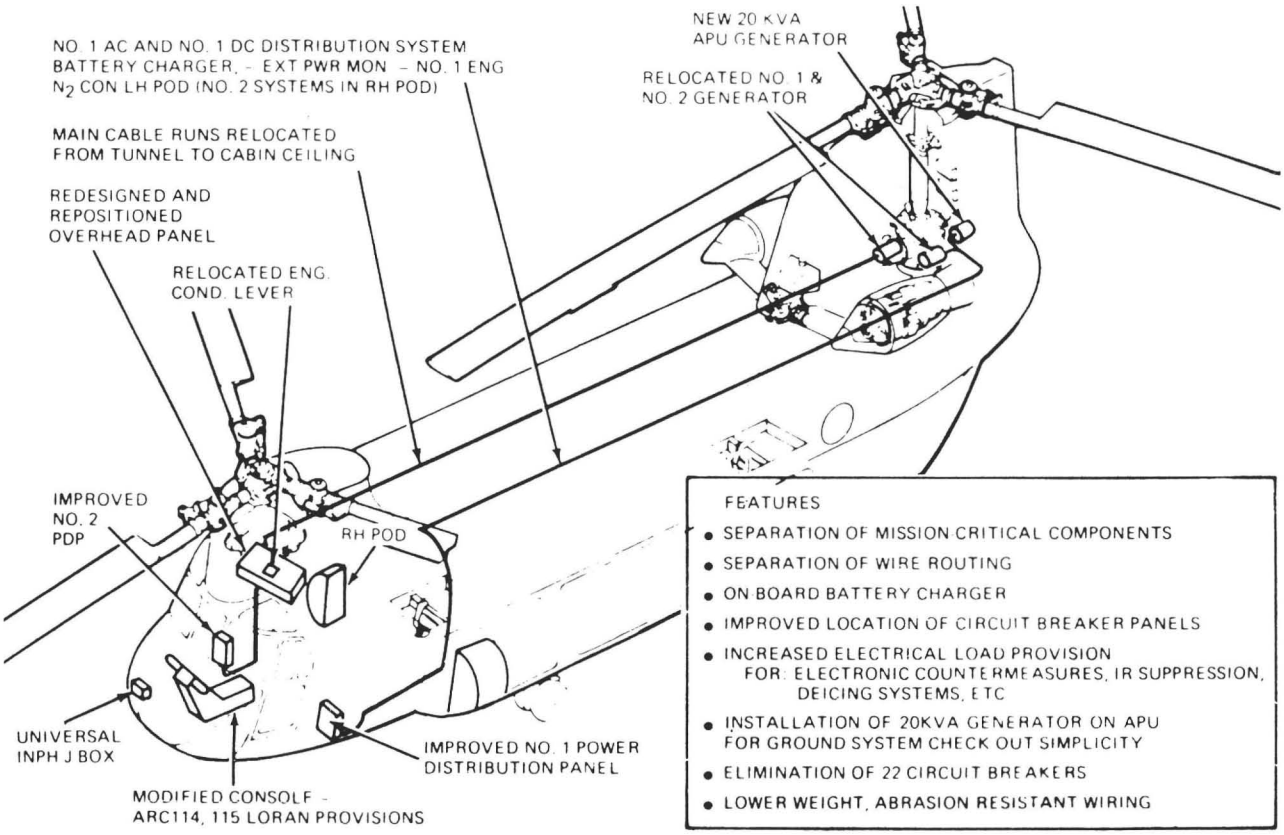

of the aircraft. This system has proven to be vulnerable; if damage is experienced in this area, there could be a *total* loss of power.

As shown on the airframe diagram (figure 6), many changes in addition to the aforementioned will be made in the electrical system of the modernized aircraft. Some of the additional features include: Separation of mission-critical components and wire routing; improved location and reduction in number of circuit breakers; and provision for improved auxiliary power capabilities. The system will be upgraded to accept avionics and aircraft survivability equipment systems. This improved design will reduce vulnerability and provide improved FAR characteristics.

The existing flight control system will be improved to provide additional stability augmentation in flight and hover control and all-around maneuverability. These modifications will increase the all-weather, navigational and NOE capabilities of the aircraft. In addition, the improved system will reduce load acquisition time during hover operations and significantly enhance safety and reliability in confined areas under conditions of reduced visibility due to blowing dust, sand or snow. This system already has been developed and tested and is being installed on CH-47s procured by the Canadian Armed Forces. Provisions also have been made for installation of the system on Royal Australian aircraft at a later date.

Figure 7 provides a system performance comparison between the existing CH-47C flight control capability and the advanced flight control system to be provided through the modernization program.

Aircraft in the present fleet have one cargo hook. This poses limitations relative to the stability of external cargo. A triple cargo hook suspension system is being considered which will permit transport of large bulky cargo under more stabilized and safer conditions. Triple suspension will greatly enhance flexibility to accommodate numerous load configurations. The system will permit some loads to be carried at about twice the airspeed now recommended and it will provide the potential for a 3-hook load suspension while retaining a redundant hook release system. The triple cargo hook suspension system already has undergone preliminary flight testing on an existing CH-47C (figure 8).

The CH-47 modernization program incorporates current technology at low risk without major structural changes. The modification program will provide the Army with a medium lift helicopter fleet throughout the 1980s and the aircraft will be characterized by increased safety. In addition, there are improvements in FAR and reduced vulnerability at a relatively minimal cost when compared to a new development program.

Figure 7
Flight Control System Performance

ITEM	CH-47C	AFCS SYSTEM
ROLL TRIM HOLD	WING LEVEL ONLY	ANY BANK ANGLE
ALTITUDE HOLD	NONE	± 50 FT IN MODERATE TURBULENCE
HEADING HOLD	NONE	TO ± 1 DEGREE
HEADING SELECT	NONE	TO ± 1 DEGREE OF PRE-SELECTED HEADING
AIRSPEED HOLD	± 4-5 KTS IN MOD. TURB.	± 2-3 KT IN MOD. TURB.
PITCH CONTROL CHARACTERISTICS, POSITION AND FORCE GRADIENTS	POSITIVE, 0 TO 70 KNOTS NEUTRAL, 70 TO V_{MAX}	POSITIVE GRADIENTS AND POSITIVE SPEED STABILITY 0 TO V_{MAX}
VERNIER TRIM (LONGITUDINAL & LATERAL BEEP)	NONE	BOTH CHANNELS
MANEUVERING PICKOFFS	NONE	PITCH, ROLL & YAW

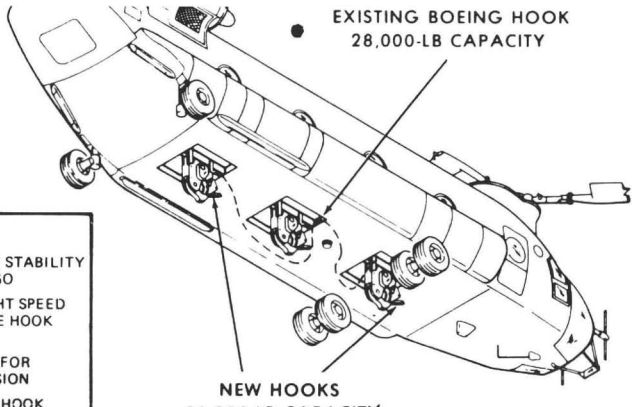

FEATURES
- IMPROVED MANEUVER STABILITY WITH EXTERNAL CARGO
- DOUBLES LEVEL FLIGHT SPEED CAPABILITY OF SINGLE HOOK WITH BULKY LOADS
- PROVIDES POTENTIAL FOR 3-HOOK LOAD SUSPENSION
- RETAINS REDUNDANT HOOK RELEASE SYSTEM

CH-47 Multiple Cargo Hook System
Figure 8

ATTENTION CH-47 CREWMEN! You can help the CH-47 modernization program (see preceding article) by filling out and mailing in this questionnaire. The information is to be used only for purposes of documentation of CH-47 operational problems. The CH-47 fleet is being evaluated for a modernization program designed to increase aircraft reliability and forward area ruggedness (FAR) characteristics, increase safety and survivability, and extend the fleet life through the 1980 to 1990 timeframe. An advanced flight control system (AFCS) and a three hook external cargo suspension system (one each additional hook fore and aft of the present hook) are two of the candidate systems in the modernization program. The requirement for these systems must be justified in qualitative and/or quantitative terms. Your honest response to the survey will help provide needed information. Tear out this page, fold as indicated and mail it. If you need additional space, attach a sheet. The point of contact at the U.S. Army Aviation Center, Fort Rucker, is Major Keller, AUTOVON 558-5418/2307.

a. What is your unit's SOP regarding jettisoning of external payloads during operations in inadvertent/planned instrument meteorological conditions (IMC) with external payloads?

b. What are the SOP instructions for both enroute and hover operations at night with external payloads?

c. What are the lighting conditions under which night operations are accomplished?

No Light	Moon Light Level	Aircraft	Lighted Landing Zone (Type Light)

d. Has there been any attempt to work in tactical/unit landing zones under less than quarter moon conditions with external payloads?

Operating Conditions:

Capabilities:

Limitations:

CH-47 Aircraft Model	Stabilization Available	Stabilization Required

Suggested Improvements:

e. Identify types of external payloads being flown:

f. Approximate percent of total daily average mission time devoted to various payloads:

g. Indicated airspeeds at which various payloads are flown:

h. Degree of stability:

Very Stable	Moderately Stable	Moderately Unstable	Very Unstable

i. What type of payloads could and should be configured for dual hook suspension?

j. What type of payloads cannot be rigged for dual hook suspension but should be stabilized?

k. Considering the stabilization available with a dual hook suspension, what type of payloads will still require additional stabilization (such as offered by AFCS) under conditions of VMC, IMC, night or combination thereof?

l. What are the most inherently unstable payloads transported externally by the CH-47?

m. What significant payloads have been damaged due to aircraft instability (i.e., howitzer sights during emplacement, etc.)?

Continued next page

Cut along line at right, fold and mail postage free

n. What payloads have caused damage to the aircraft or had to be released to prevent damage to the aircraft? Identify cause.

o. Describe circumstances under which you have released a payload due to any of the above conditions.
Year Load Location Reason for Release Weather conditions

p. Please describe any other incidents and/or operational problems you encountered during external load operations which might have impact on the study.

q. Does the current CH-47 SAS/PSAS adequately fulfill your operational requirement under:
(1) VFR conditions/internal load
(2) IFR conditions/internal loads
(3) VFR with external loads
(4) IFR with external loads

FOLD

DEPARTMENT OF THE ARMY

Commander
U. S. Army Aviation Center
ATTN: ATZQ-D-SG
Fort Rucker, AL 36360

OFFICIAL BUSINESS

POSTAGE AND FEES PAID
DEPARTMENT OF THE ARMY
DoD-314

U.S.MAIL

Commander
U. S. Army Aviation Center
ATTN: ATZQ-D-SG
Fort Rucker, AL 36360

FOLD

Attach a page inside if necessary

Staple

Staple

Continued from page 17
high threat environment. The keystone manual is FM 90-1, Employment of Army Aviation in a High Threat Environment. This manual is the doctrinal basis for employment of aviation as a part of the combined arms team in the high threat environment. It will act as a stimulus for major changes in the employment of Army aviation in the future. The second manual being developed is a replacement for TC 1-15, Nap-of-the-Earth Flight. This publication will be expanded into a field manual entitled "Terrain Flying." It will provide unit commanders guidance in terrain flying techniques for training and employment of aviation units and training of individual aviators in NOE (nap-of-the-earth), contour and low level flight. The third publication is a new training circular entitled "Rotary Wing Night Flight." It provides the unit commander with detailed information needed to establish individual and unit night training programs. It is oriented to the high threat environment and is vital because of the need for aviation to be able to operate around the clock. It also contains a chapter on the description, care and use of the AN/PVS-5 night vision goggles which are to be introduced for use in tactical units in the near future.

Heavy Lift Helicopter (HLH): With a design gross weight of 118,000 pounds, the HLH is to be a tandem rotor helicopter powered by three Allison developed gas turbine engines in a Boeing-Vertol airframe. Despite the Army Systems Acquisition Review Council decision not to commit the HLH to engineering development, the Advanced Technology Component program continues. It features a Dynamic Systems Test Rig which integrates three engines, an aft rotor system, aft and combining transmissions and interconnecting shafts—all designed to simulate load conditions which a flying HLH would encounter. The prototype HLH is the first helicopter designed around the fly-by-wire concept and also employs two pneumatic winches giving a dual-point load hoisting and carrying capability. Tests completed at the Boeing plant last April demonstrated loads of 70 tons could be lifted and hoisting speeds up to 60 feet per minute attained. Flight vehicle assembly is now in progress with a formal Prototype Preliminary Flight Rating Test in March, a Safety Demonstration Test in July 1976, scheduled rollout the following October and test flights from March through October.

Air Traffic Management System (ATMS): The Army has recognized the need for an improved air traffic management system to provide the commander increased operational capabilities and allow him greater flexibility in the employment of his aviation assets. Current tactics and doctrine of employment of the Army's aircraft necessitated by the high air defense and electronic warfare threat environment dictate system simplicity and mobility. Aircraft in the brigade area will operate at terrain flight altitudes and will be integrated into the ground commander's scheme of maneuver. Flight following, when required, normally will be with the aviation unit operations. The ATMS services available in the brigade area may include an instrument letdown facility in the brigade rear when the threat allows and navigational aids when required. Both division and corps instrumented airfields will be provided to allow operation during instrument meteorological conditions (IMC). Enroute facilities located in the division and corps provide control for IMC traffic and flight following to other traffic when requested. New equipment for the ATMS currently in production includes the AN/TSQ-97 Manportable Visual Control Facility and the AN/TRN-30 Non-Directional Beacon available in a pathfinder version and a semi-fixed version. By the early 1980s the ATMS will include an enroute facility with area surveillance radar to enable controllers to confirm traffic in the area being managed, an improved control tower for the division and corps instrumented airfields and a tactical instrument landing system that will provide interservice compatibility in the brigade, division and corps rear areas.

MAST

Four months after the Military Assistance for Safety and Traffic (MAST) program got under way at Fort Campbell, the Air Ambulance Platoon of the 326th Medical Battalion had flown 30 missions. They ranged from transferring a set of premature twins from Vanderbilt University Hospital in Nashville, TN, to Columbus Medical Center in Georgia to transferring a leukemia patient from Welborne Baptist Hospital in Evansville, IN, to St. Jude's Hospital in Memphis, TN. In one unusual MAST Mission the Air Ambulance Platoon was asked to search for a missing nursing home patient. The patient was elderly, in ill health and was wearing only thin clothing in 30 degree weather. She was found and returned to the nursing home.

Army Air Mobility R&D Laboratory

The Sikorsky S-67 with a 4 foot 8 inch diameter tail fan

THE U.S. ARMY Air Mobility Research and Developments Laboratory (AMRDL) is the research and development (R&D) field activity of the U.S. Army Aviation Systems Command (AVSCOM). It consists of four directorates under a single headquarters at Ames Research Center, Moffett Field, CA.

The former AVLABS (aviation laboratories), Fort Eustis, VA is now the Eustis Directorate and the former Aeronautical Research Laboratory at Ames is now the Ames Directorate. The other two are the Langley Directorate, Langley Research Center, Hampton, VA, and the Lewis Directorate, Lewis Re-

[redacted]

gle unified program. A unique feature of the laboratory is its interagency relationship with the National Aeronautics and Space Administration (NASA). This not only conserves the resources of both agencies but also provides the Army with direct access to the facilities and professional expertise of NASA. AMRDL has the objective of developing the technology needed to provide simple, rugged, reliable airmobility equipment which the typical soldier can operate and maintain. Special effort is placed on immediate and long-range research and development of advanced aircraft.

The laboratory represents the tremendous effort placed by the Army on research and development. It is authorized more than 600 civilian and military personnel, three-fourths of which are scientists, engineers, technicians and other professionals directly asso-

[redacted]

Army. Many of these are so new that they have yet to be incorporated into the equipment now being used.

A brief review of some of the more important ongoing programs follows.

Tilt-Rotor Research Aircraft. This aircraft, with wing-tip rotors for vertical lift, takes off like a helicopter. The rotors are then tilted gradually forward to provide propulsion for cruise flight. For more information regarding this aircraft see the article "Tilt Rotor Aircraft" page 6.

Rotor Systems Research Aircraft (RSRA). The aim of this joint Army/NASA program is to develop an aircraft that will provide the Army with the research capability to evaluate the potential of newly advanced rotor concepts, as well as verification of numerous areas of supporting research and techniques. Significant features of the aircraft include:

[redacted]

dence wing to unload and load the rotor

- removable wings and auxiliary propulsion for testing in both the helicopter and compound configurations

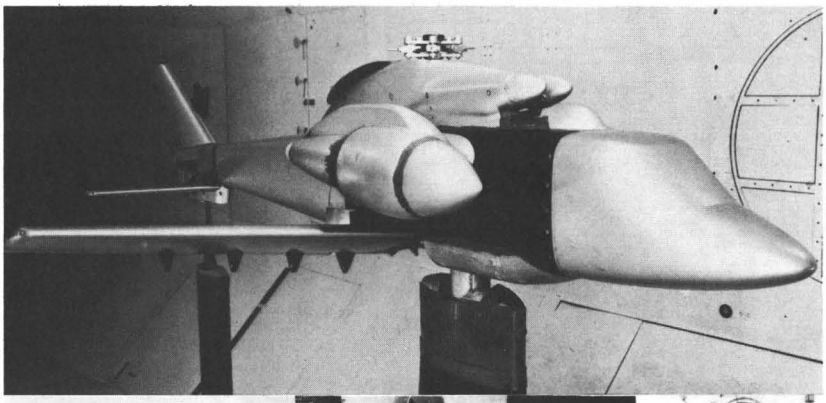

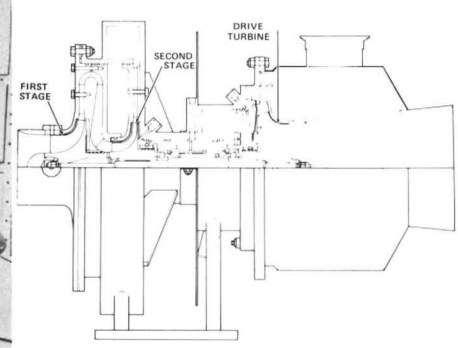

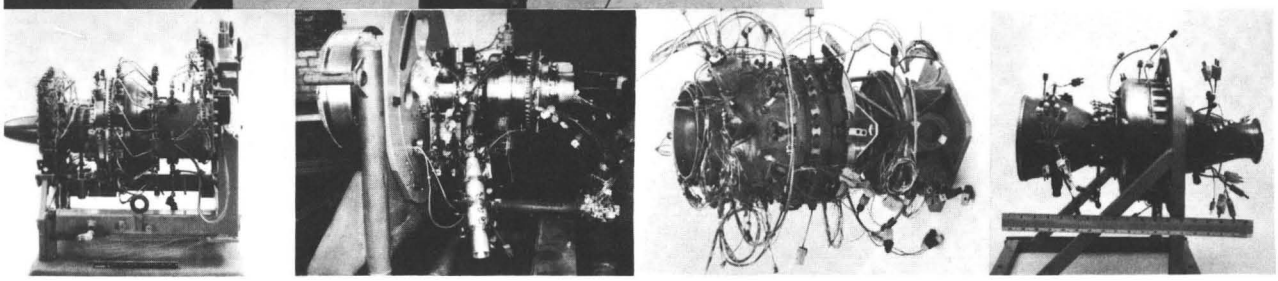

Top Left—The Rotor System Research Aircraft model in a variable density wind tunnel. Top Right—Turbine showing two stage centrifugal compressor. Above — STAGG gas turbine core engine

- an electronic and mechanical flight control system
- an emergency recovery system from the aircraft in its fixed wing configuration or by extraction of the crew from its rotary wing configuration.

Wind tunnel tests of a scaled model of the RSRA are underway. First Flight is scheduled for October 1975.

Fan-in-Fin. The laboratory has evaluated the feasibility of a fan-in-fin antitorque and directional control system as an alternative for the tail rotor by flight tests of both the French SA-341 and a larger aircraft, the Sikorsky S-67. Ground and flight tests have been successfully completed on a Sikorsky S-67 fitted with a 4 foot 8 inch diameter tail fan. Improved reliability, reduced maintenance, reduced hazards to ground personnel and decreased vulnerability to terrain contact damage are the expected gain from use of a tail fan. Disadvantages of the fan-in-fin include increased weight and higher cost.

Small Turbine Advanced Gas Generator (STAGG). This is a gas generator development effort to provide demonstrator or development engines for future Army aircraft and auxiliary power units of 200-to-800 horsepower. The present objective is a 20-to-30 percent reduction in fuel consumption with a 35-to-45 percent power increase. Four contractors are participating competitively to provide a core gas generator that will meet the specifications. Component testing is completed and the four contractors have begun gas-generator testing.

Superhard Transparent Coatings. Most Army helicopter canopies are made of stretched acrylic plastic. Canopies are prone to damage from sand, dust and flying objects. A superhard transparent coating has been developed which may reduce the need for frequent replacements. Superhard designates material with hardness or abrasion resistance of at least five on the Mohs scale, where glass has a hardness of six and diamond ten.

Compressors. Testing has been completed for a two-stage centrifugal compressor that uses two existing centrifugal compressor stages, scaled to operate in tandem, with minor modifications for aerodynamic rematching. In this program the compressor demonstrated the capacity to develop a pressure ratio of 13.2:1 for 1.94 pounds-per-second airflow with a nearly constant operating line efficiency of approximately 77 percent.

Aerial Delivery and Cargo Handling. A family of cargo slings has been developed for transporting external loads of up to 60,000 pounds by helicopter. Aimed at correcting the shortcomings of the present slings, prototype hardware has been fabricated and tested under operational conditions with loads ranging from a 560-pound trailer to a 31,000-pound crane. Capability in cargo handling was further advanced by efforts made to improve pallets and/or gondolas for use in the external transport of cargo by Army helicopters.

VIEWS FROM READERS

Sir:

Enclosed for your use are pictures of the approved unit insignia [upper right] for the newly created 6th Cavalry Brigade (Air Combat), also referred to as the ACCB or Air Cavalry Combat Brigade. The unit was officially activated here at Ft. Hood on 20 February 1975.

The 6th is being formed from assets of the 1st Calvary Division. An original part of the First Team's TRICAP scheme of organization, the ACCB concept was so successful that the helicopter unit is being given separate brigade status within III Corps.

The commander of ACCB is Colonel Charles E. Canedy. He retained command of the 3,500-man unit when it became separated from the First Team's armor-oriented structure.

This office will be pleased to provide you with any further information on the First Cavalry Division. Further inquiries concerning ACCB should be directed to:

Commander
6th Cavalry Brigade
ATTN: Information Officer
Fort Hood, TX 76544

MAJ John E. Grabowski
Information Officer
1st Cavalry Division

Sir:

The following is an announcement of our Special Summer Program which we believe may be of interest to readers of the U.S. ARMY AVIATION DIGEST:

Air Transportation Systems Analysis
Massachusetts Institute of Technology
June 16-27, 1975

The program is concerned with air transportation in its broadest sense. The technological, operational and economic aspects of problems in air transportation are addressed concurrently, and a complete systems analysis viewpoint is emphasized. The program is pointed towards aiding the air transportation system by identifying the effects of new technologies, studying current and future problems and describing new methodolgies for analysis of operational and economic problems.

For further information, please contact:

Director of the Summer Session
Room E19-356, M.I.T.
Cambridge, MA 02139

Sir:

We request the following information be included in the DIGEST.

Attention graduates of AMOC Phase II, III, IV and V. The Test Flight Branch at Ft. Eustis, VA, rewrites the test flight handbooks and publishes changes to these as necessary. Graduates will receive these changes *only* if their address cards, which are maintained by the branch, are current. So if you are a graduate of one of these courses and you want to receive the changes as they are published, send your current address to:

Director
Aviation Maintenance Training Department
Maintenance and Quality Assurance Division
ATTN: Test Flight Branch
Fort Eustis, VA 23604
AUTOVON 927-5390/3721

We have a new handbook change ready to mail to graduates of AMOC Phase IV. However, current addresses are needed if they are to be sent! Let's hear from you people!

SFC Joe E. Harless
Test Flight Branch
OV-1 Section
Fort Eustis, VA 23604

STANDARDIZATION CORNER

IN RESPONSE TO letters and comments concerning the Instrument Corner of the January 1975 issue of the AVIATION DIGEST, the following clarification is presented.

Those of you who indicated that as the situation was presented, the aviator could descend immediately to 2,200 feet are absolutely correct. What the article should have indicated is that the controller's manual makes it incumbent upon the controller to guarantee unrestricted descent to the lowest published altitude specified in the approach procedure prior to final approach descent; and if he cannot do this, he must issue appropriate altitude restrictions in the approach clearance or defer issuing the clearance until unrestricted descent is possible.

What needs to be stressed here is that this is a requirement placed on the controller, and in the publications normally available to the pilot, there is no mention of the fact that he may begin an unrestricted descent to the lowest published altitude specified, prior to final approach descent. Therefore, should the pilot elect to remain at the last assigned altitude until intercepting the final approach course, he has in effect eliminated one more possibility of human error, assured himself of an additional safety margin and used good judgment.

Thanks to those of you who indicated clarification of the point was needed. We welcome your letters and comments—keep them coming.

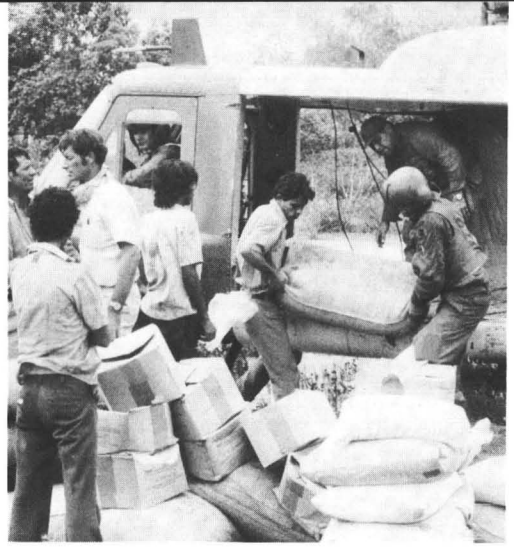

. . . a UH-1 crewchief assisted by civilians unloads relief supplies in Sula Valley for exhausted hurricane victims . . .

Honduras Disaster Relief Operation

Continued from page 9

Huey crewmen discuss mission with the 210th Battalion liaison. Lower photo, Dr. Benjamin Erazo, Honduran Ambassador to Panama thanks battalion members for relief mission efforts

3,600 people to safety and logged 579 hours (1,393 sorties) in support of the disaster relief operation.

Throughout the disaster relief mission, operations personnel from the battalion were stationed at the La Mesa Airport where they controlled dispatching, loading, parking and refueling of all aircraft, to include those of other countries involved in the relief effort. They also coordinated all medevac and mission requests, working closely with the armed forces of Honduras and personnel from other countries.

The ingenuity and proficiency of the 590th Maintenance Company personnel were challenged 24 hours a day, to include a UH-1H transmission change. With the aid of a forklift in lieu of a hoist, they managed to change the transmission on site at La Mesa in minimal time. Additionally, the 590th personnel assisted in performing 19 periodic intermediate inspections. They were further tasked to perform maintenance on the U-21 aircraft. By working 24 hours a day, the 590th Maintenance Company personnel kept all aircraft operational with minimal downtime throughout the emergency operation. It should be noted that the entire operation, which was conducted under severe and hazardous conditions, was accident and incident free.

The 210th Aviation Battalion once more provided the immediate responsive support that is expected in disaster operations and stands ready to be called again. Honduras, Costa Rica, Peru and Nicaragua are countries knowledgeable of the capabilities of the 210th having been assisted in emergency situations in the past four years. All of Latin America rests assured that if needed, the 210th Aviation Battalion will be there.

Survivability: Key To Staying Power

Captain Thomas Hanlon
Office of the Deputy for Developments
U. S. Army Aviation Center, Ft. Rucker

TOMORROW'S BATTLEFIELD undoubtedly will be a maze of sophisticated air defense weaponry employing the most advanced technology in terms of target acquisition and fire control. Laser-guided, radar-directed, infrared homing, and electro-optic acquisition will become familiar terminology to Army aviation. We need only compare the 1967 role of air defense in the Middle East to that of the 1973 conflict to realize the growing threat to Army aviation and to determine that the day of reckoning is at hand. What is being done to counter the threat and enhance survivability?

Today, a program known as Aircraft Survivability Equipment (ASE) is dedicated to increasing the probability of survival for Army aircraft operating in a hostile environment. The program is responsible for fielding active and passive radar, infrared, and optical countermeasures as well as vulnerability reduction from the effects of small arms and antiaircraft artillery (AAA) fire. Operating under a Department of the Army approved required operational capability (ROC), the U.S. Army Training and Doctrine Command, representing the user, in cooperation with the Army Materiel Command, as the developer, are jointly examining the requirements of the current Army aircraft fleet as well as developmental aircraft. They must also recommend necessary items of equipment needed for sustained combat in the high threat environment.

Take for example, one area of interest—infrared (IR)—and examine the ASE approach to survivability. IR can be addressed by reducing the signature the aircraft represents, by giving the crew warning that a missile has been fired and by giving them sufficient countermeasures to deceive or confuse the weapon.

Most IR weapons today require visual acquisition prior to engagement. Operating at nap-of-the-earth (NOE) flight with properly painted aircraft is a proven countermeasure to visual acquisition. IR weapons require a source of energy for their guidance system to lock on and track. Hot metal parts, engine exhaust, solar glint from rotor blades, airframe surfaces and canopies offer an excellent energy source for locking on by IR weaponry. Engine plume suppressors, low reflectance paint and flat plate canopies can significantly reduce these sources of energy thus degrading or defeating the capability of the weapon. When deceptive sources of energy such as flares are ejected in proximity to the intended target, the guidance system becomes confused and seeks the source of greatest energy within its field of view. Missiles require propellants for launch and the energy they emit can be detected, measured and conveyed to the crew by means of missile launch detectors which afford the crew an opportunity to take evasive action and activate IR countermeasures.

Many items of ASE such as radar warning receivers and interim IR suppressors are available today but it will be several years before a satisfactory survivability package can be provided for the current aircraft fleet. The data base from which ASE will evolve is well advanced except for the optical area in which major efforts will be required to produce threat warning and active countermeasure equipment. In the meantime, commanders and aviators must become thoroughly familiar with the probable threat against which they are likely to deploy. Based on this knowledge, operational concepts and techniques must be continually refined to meet our immediate needs.

And so it goes—a never ending cycle of evaluating a potential adversary's capability, developing techniques and equipment to enhance our survivability, increase combat effectiveness and maintain superiority.

Applied Technology for Tomorrow's Aviator

Steve Kimmel
Department of the Army Civilian
HDL Public Information Officer

THE U. S. ARMY's Harry Diamond Laboratories (HDL) is conducting a wide range of research and development activities directed at improving materiel and tactics for tomorrow's aviator. Among these activities are the coupling of advanced radar techniques for target detection and many supporting technologies that result in rugged miniature electronic devices.

The initial character of HDL's efforts was proximity fuzing, but now it is diversified into a wide spectrum of investigations that generally are described as electronic ordnance oriented.

In September 1974, HDL demonstrated the Army's first successful test of a slant range optical fuze to permit the delivery of munitions at an increased distance from the target. The fuze is basically a narrow beam optical radar. A semiconductor laser radiates a pulsed output on a narrow beam which is reflected from the target. The receiver uses a range gate technique to determine the slant range from projectile to target. By interfacing laser and fuzing technologies with a standard 2.75 inch rocket, HDL increased the flexibility, thereby permitting the possibility of improved tactics for tomorrow's battlefield.

Another of the labs' versatile technologies is the remote communications data link being developed for Tri-Service rocket munitions. This important technique allows the pilot to select the fuzing function (proximity, near surface burst, point detonating, delay after impact) at the time of launch from the aircraft—either fixed or rotary wing. Successfully demonstrated last year, the technique is compatible with both high explosive and cargo munitions. Using an inductive loop embedded in the bulkhead of the launcher, the pilot communicates with the rocket munition, and the fuzing option is selected as the munition is accelerated from the launcher. In an ultimate form, the remote setting design can be coupled with a fire control computer used in conjunction with electronic time fuzes to automatically set the required time to detonate after launch for maximum effectiveness as dictated by the engagement scenario.

In recent years, HDL has increased its coordination with the Tri-Service weapons community to improve the safety aspects of air-launched munitions. The fluidic generator had been demonstrated on numerous projectiles as a versatile device in providing an independent dual safety signature while simultaneously providing either or both electrical and/or mechanical energy. In addition, the device has demonstrated:

- velocity discrimination to prevent inadvertent firings
- velocity measurements to provide an internal weapon system capability of determining the rate of launch for mine seeding tactics or cargo applications
- environmental sensing for meeting dual safety specifications
- an electrical energy source to replace chemical or thermal power supplies with the added advantage of driving a mechanical safety and arming gear train if required

As the Army's lead laboratory for fluidic technology, HDL has closely supervised the development of a hydraulic stability augmentation system (SAS) for helicopters. Under the sponsorship of the U.S. Army Air Mobility Research and Development Laboratory, a hydrofluidic SAS is being incorporated into one version of the Army's Utility Tactical Transport Aircraft System (UTTAS). This hydrofluidic SAS will provide three-axis stabilization with a reliability expectation in excess of 80,000 hours mean time between failures and a low initial cost.

By maintaining a dialogue with project managers and commodity commanders, HDL is applying its numerous capabilities to improving weapon and aircraft systems for tomorrow's aviator.

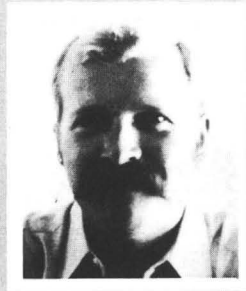

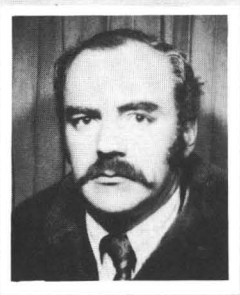

CW2 ROBERT J. MONETTE (left) served two tours in Vietnam and had 1,396 combat hours. His decorations include the Distinguished Flying Cross, Bronze Star with one oak leaf cluster, Air Medal with V device and 57 oak leaf clusters, Army Commendation Medal with V device, and Vietnam Cross of Gallantry with one silver star and two bronze stars. Mr. Monette left the Army in November 1974 after 6 years service. **CW2 BOBBY L. RINEHART** (center) served two tours in Vietnam and is currently serving as safety officer and UH-1 SIP and instrument IP with General Support Aircraft Section, Aviation Division, Directorate of Plans and Training, Fort Sill, OK. His decorations include the Silver Star, two Bronze Stars, Air Medal with 37 oak leaf clusters, Purple Heart, Army Commendation Medal, Vietnam Cross of Gallantry with silver star, and two unit awards of the Vietnam Cross of Gallantry with Palm. **CPT MICHAEL J. BROWN** served two tours in Vietnam. His decorations include the Distinguished Flying Cross, Bronze Star with V device and four oak leaf clusters, Army Commendation Medal, Air Medal, and Vietnam Cross of Gallantry. CPT Brown left the Army in June 1973 after 7 years service.

USAAAVS

"MISSILE!

THE NECESSITY FOR around-the-clock nap-of-the-earth flight was brought about by some of the weapons introduced by enemy forces in Southeast Asia. One of these weapons was the SA7 Strella missile. Three aviators, CPT Michael J. Brown, CW2 Robert J. Monette and CW2 Bobby L. Rinehart, told us about their encounters with the SA7.

MR. MONETTE: First, let me give you a little background information on the SA7. It was introduced in Vietnam as a new surface-to-air weapon. Our first encounter with the missile was in June 1972. We noticed a strange light smoke trail coming up from the ground and suddenly our Cobras would lose their tail booms and go spiraling to the ground.

We later learned that the smoke trail was from a new type of weapon—a heat-seeking missile. This wasn't much to go on and after losing two crews, tension was building.

CPT Brown was hit by an SA7 and successfully

MISSILE! MISSILE!"

landed the aircraft with no fatalities. Through his experience, we learned a lot. He visited other units and told about the procedures that saved his life. In this way he probably saved quite a few lives in Vietnam.

CPT BROWN: I was on a mission in support of an RVN airborne brigade. We had a heavy fire team of three AH-1G Cobras. I was the aircraft commander of Chalk 3. On my second gun run I was providing suppressive fire. I broke to the right and made a pass right over a highway. I was in the process of rejoining Chalk 2 to take up his wing position when I was hit by an SA7 missile.

As far as I know, no one else had ever survived this type of antiaircraft fire in a helicopter. I think we survived because of a combination of things. First, and probably the single most important thing, was the fact that other aircraft crews in the area were able to see the missile being fired. When they saw it, they yelled "Missile! Missile! Missile!" over the radio. The fact that I knew what I had been hit with and knew what the aircraft should do was the most important factor in our survival. Every unit and task force operating in areas where SA7s are known to be should have an SOP for alerting aircraft when a missile is fired. Aircraft should be in position to advise or observe as near to 360 degrees around the flight as possible.

After hearing the call "Missile! Missile! Missile!" I looked over my left shoulder and saw the smoke trail signature of the SA7. I saw that the missile was heading for my aircraft and just as I saw it, it hit. At the same time, I was rolling off throttle and bottoming collective pitch. When the missile hit, the tail boom was totally severed in the vicinity of the battery compartment, which is directly below the exhaust stack on a Cobra. The aircraft went into a spiraling descent and continued to spin slowly to the

right about its mast in a nose-low attitude. I did not look at any of my instruments after I was hit. I lost all radio communications, but I did have intercom communications with my pilot. I told him to empty his turret gun but he was unable to do so. I made very few control movements going down. I tried unsuccessfully to jettison my wing stores.

Having been aware for some time that this could happen, I had thought it through as to what I would do if an SA7 ever blew off the tail boom of my aircraft. It seems that one characteristic of the missile is that it severs the tail boom if it strikes from the side. I felt that the problem I would have with no tail boom would be that the cg would shift. As I said before, the only control movement I made was to pull complete aft cyclic and hold it there and to bottom my collective pitch and hold it there.

About 30 feet above the trees I pulled pitch. I pulled pitch at about the same rate that I would in a normal autorotation except that I pulled every bit of pitch that I had as I reached the ground. The second most significant thing that saved me was the fact that I did land in trees. I had no choice over whether I was going to land in the trees or in an open area. I had no directional control. But luck was with me and I landed in the trees. The trees helped me in two ways. They stopped the spin of the aircraft and they helped cushion the fall.

I think your mental state is as important as anything else as far as surviving a thing like this. Having been exposed to the SA7 missile threat for about two months, there was no question in my mind on the way down that I was dead. However, I never gave up. I had enough control over the aircraft to do something for myself. I still had a good rotor and two controls—my aft cyclic and my pitch control—and in the end, the things I was able to do with these two controls helped save our lives.

I think probably the most critical point comes when you reach the altitude where you should pull pitch, 30 feet or so. I knew in my mind that I had had it, that I was dead from this point on or I would be dead in a very short time. However, I did what I thought I should do anyway and, fortunately, it worked. I feel that it's very important that you continue to fly the aircraft no matter what your situation is. If you use every available control, every control is an asset and you have some chance.

MR. MONETTE: With what we learned from CPT Brown, and knowing about the SA7 being a heat seeker, we established our own emergency procedures. If we heard a call "Missile! Missile! Missile!" over the radio, all aircraft crews in that vicinity would immediately chop their throttles, push down on the collective, and if we knew where the missile was coming from, turn into the missile. This would immediately move our infrared (IR) signature to a trailing type mode. This put our aircraft pointing toward the firing point which hopefully would make it very hard for the missile to do a 180-degree turn and come back and hit us.

We received multiple firings of the SA7. Some of them were seen at the time of the firing and some of them were noted long after they were gone and the smoke began to trickle away.

We were just beginning to get the new IR suppressive kits, and I would say half our aircraft had them by September. During one mission, two Cobras and one OH-6 were going into an area at about 2,000 feet when three missiles were fired at us at one time. All three aircraft were equipped with the IR kit. The missiles missed us and I think it was because of the infrared shields.

We knew that most of the missile firings would come from a point either at our left rear quarter or right rear quarter where the man firing the missile would have time to warm up his missile—his gyro—bead in on us and actually fire. Also, this allowed him more protection because, in crosschecking from left to right in flying, you don't very often check your right rear quarter. With this we knew that if we split the needles and put the aircraft into a right or left descending rapid turn we had a greater chance of surviving if the missile was actually coming at us.

One morning in December, CW2 Rinehart and 1LT Bruce G. McKennty were shot down by an SA7 missile. I took part in that mission, but let's interrupt my story and let Mr. Rinehart tell exactly what happened.

MR. RINEHART: The infrared shields were on all our aircraft by this time. We had been fired at on many occasions with as many as five missiles at one time. Since we had not taken any hits, everyone was fairly confident in the effectiveness of the infrared heat shield system.

Three days before I was hit we had been given a briefing on the SA7 missile. The briefing included

photographs of the missile, how it worked and how accurate it was. We were told there were two conditions under which we would be most susceptible to being hit with the missile, the first being a day when an absolutely clear blue sky existed and there was complete contrast between the aircraft and the background sky and the second during a completely overcast day.

I was thinking about this the day I was hit because the sky was completely overcast. The ceiling was approximately 17,000 feet. We were on a visual reconnaissance mission with a team of two Cobras, one OH-6 scout and one UH-1 command and control (C&C) ship. We were told there was a possibility of SA7 missiles in the area.

We entered the area and began our visual reconnaissance. We were about 50 to 55 minutes into the mission with the OH-6 scout down on the deck. We had two Cobra gunships flying orbit at 2,000 feet with the C&C ship at 3,500 feet. We were 180 degrees out from each other and I was flying wing on Monette. We were using a tactic at the time that we thought to be very effective. It was called bird dogging. We could monitor each other's 180-degree position while going through various maneuvers—evasive tactics. This consisted of climbing, descending, changing airspeeds, and making sharp right and left turns in orbit, watching our own tail 180-degree position and watching the wing ship's 180-degree position.

I had just finished one of these maneuvers when I noticed Monette was turning away from me, starting the same type maneuver. We had been straight and level for approximately 2 to 5 seconds, and our airspeed was about 100 knots at 2,000 feet, when I heard for a split-second the sound of a rocket motor. The sound was the missile just before impact. Crews of the other aircraft later told of seeing that distinctive white smoke trail leading from the ground. It was the telltale white smoke peculiar to the SA7. The aircraft shuddered when the missile hit. There was smoke and fire in the cockpit, immediate engine failure and communications and electrical failure. I immediately went into autorotation. Apparently the missile struck the aircraft on the left side of the engine cowling or just forward of the engine compartment, around the edge of the wing near the fuel cell. The smoke was so thick I could not see the instrument panel or outside the aircraft. I put the aircraft in a dive because I had a feeling we had been hit by an SA7 Strella and feared the aircraft would be completely consumed by fire before reaching the ground. My copilot, LT McKennty, later told me he did not realize at the time we had been hit by a missile. I continued on down, yelling at McKennty to look for an area for us to go into. He said he had an area off to our left front. I didn't know it at the time, but he had spotted an open area in the jungle across the river that we were paralleling. I had seen an area short of the river on our side and headed toward it. I realized at this time that if I continued the dive I could overshoot the bombed out area I was trying to make.

As I decelerated, I made a slight left turn toward the landing area. Visibility was still poor because of the dense cockpit smoke. I told McKennty to open his canopy to clear the smoke. When he did, the entire cockpit filled with flames. I released the controls, grabbed my canopy with both hands and shoved it open as far as it would go. Flames were engulfing my face and it was very difficult to breathe. At first I had my helmet visor down, but as the smoke grew thicker, it blackened my visor and I couldn't see so I put it up. When I opened my canopy, the fire was pushed back through the rear bulkhead behind my seat.

We continued down toward the open area with the aircraft still on fire. In fact, the Air Force Forward Air Controller we had on station had asked the C&C ship if someone had dropped a magnesium flare. The controller was at 11,000 feet, so apparently it was a very bright fire. At about 700 to 900 feet altitude I told McKennty I couldn't move the cyclic. He got on the controls with me from the front seat and with both of us trying, the cyclic still would not move. During this time, as I said, we had a complete electrical failure. We tried several times to jettison the wing stores. It could not be done from the front or rear seat.

At approximately 75 to 100 feet, I pulled initial pitch and continued with cushioning pitch. The aircraft was in a rate of descent that seemed to be about 15 feet per second. When the aircraft crashed, the skids caught the ground and the aircraft rolled to the right inverted. I couldn't get my seat belt undone with my gloves on so I removed my right glove. I didn't realize it until two days later, but that was when I got the burn on my finger.

Continued on page 44

This article deals with the in-flight escape and use of life support equipment by returned POWs. The article is based on papers presented by members of the Life Sciences Division, Directorate of Aerospace Safety, at the 12th annual SAFE conference at Las Vegas, 8-12 September 1974. Reprinted from AEROSPACE SAFETY

POWs AND LIFE SUPPORT EQUIPMENT

Lieutenant Colonel Charles A. Lehman

FOR MANY YEARS all the military services have collected data on ejection/bailout/survival episodes of crewmembers who were involved in aircraft accidents. More recently the United States Air Force (USAF) began collecting similar life sciences data from crews recovered after combat losses.

This article provides the first real insight into the life support problems encountered by a third group —our returned prisoners of war (POWs). The returnees were queried by mail as part of a joint HQ USAF and Air War College sponsored study. Colonel Joe Kittinger developed the format used to query USAF returnees concerning their experience with aircraft egress, life support equipment and mission data. Our statistics are based on the 209 questionnaires received of the 218 sent to the returnees. The POW responses were anonymous and voluntary.

It is important to remember that these reports come only from survivors. We know little or nothing of those who received fatal injuries during their ejection/bailout attempts. Also, it seems unlikely that many of those who incurred really severe ejection injuries were able to withstand the rigors of capture and confinement. We have no information on those individuals either.

The experiences of the POWs who returned will be compared to the experiences of successful evaders and noncombat survivors.

The returnees generally entered their ordeals under extremely trying circumstances. The higher speed of their ejections, the violent breakup of many of their aircraft, wounds sustained in flight, or injuries incurred during parachute landing resulted in more than one out of five being incapacitated when entering the evasion challenge. These injuries had a very direct bearing on the outcome of their evasion attempts.

"I believe that only severe injuries prevented me from evading and possible rescue."

This man had burns on face and neck, a compressed disc, internal injuries and bleeding, two possible breaks in his pelvis, and numerous cuts and bruises. He still evaded for 20 hours.

The flight gear worn by these aircrews was a significant factor in their escape from combat-damaged aircraft. As the canopy was jettisoned prior to ejection, the flight helmet served to protect the crewman from windblast and seat-man contact. However, 19.6 percent of the returnees who ejected (and reported the status of their helmets) said that they lost their helmets during the ejection sequence. In spite of the preponderance of high-speed ejections, this rate is close to the noncombat helmet loss rate (16.6 percent) or the successful evaders' rate (16.4 percent). Generally, the returnees' rate of helmet loss increased quite uniformly with speed, but there is a dramatic drop in the curve between 450 and 500 knots. This may be due to the relatively small sample at that speed range (20). The low rate between 200 knots and 350 knots was also somewhat unexpected, but may be due to the optimum stability of many of our ejection seats in that speed range.

USAAAVS

Configuration of the helmet during the ejection/bailout sequence is a key factor in its retention or loss as the following retention rates indicate:

RETENTION RATE	
Visor down chin and nape strap snug (Optimum configuration)	
Combat	85%
Noncombat	88%
Visor down straps loose	
Combat	84%
Noncombat	89%
Visor up	
Combat	74%
Noncombat	69.5%

In view of the high speed of most of these ejections, the relatively good retention rate may be partially explained by considering that crewmembers in combat usually keep their emergency equipment tight and well fitted. In day to day noncombat flying, they are more lax in this respect. The configuration of the successful evaders' helmets is not known.

Only four helmet failures were reported by the returnees. Three involved broken visors, while one helmet was struck by a cannon shell fired from a MIG. The aircraft canopy and helmet shell absorbed enough of the impact that the pilot was not seriously hurt.

The 209 reporting returnees described their landing sites: More than a third of the returnees began their evasion attempts in thick brush or trees. Thirty-one percent impacted on hard ground and 16 percent on soft ground. Ten percent hit amid rocks, and more than one-fifth made their parachute landings on steep slopes or ravines. In spite of the unfavorable terrain, there were only 12 major injuries and 26 minor injuries attributed to parachute landing. In a recent 3-year period, noncombat ejectees experienced a parachute landing fall (PLF) major injury rate of 8.6 percent.

Only three percent of the returnees landed in water compared to 19 percent of the successful evaders. Obviously, those crews who made it "feet wet" before ejecting fared better than those who were forced to eject over land.

Capture came rapidly for most of the returnees, just as rescue was quick for most of those who made it back. Many of the returnees were literally captured as their feet touched the ground. Within their first two hours on the ground, 65 percent of the returnees had been captured. In that same interval, 49 percent of the successful evaders were rescued. At the end of six hours on the ground, 70

percent of the returnees had been captured and 75 percent of the evaders rescued. In the densely populated sections of the enemy area, long evasion episodes were not the rule. This would probably be true in future daylight operations in any densely populated area of the world.

Even so, there were some amazing, extended evasions among the returnees. Six of them avoided the enemy for more than three days. Of these, two lasted a week and one, eight days. One, who was captured immediately, escaped and evaded for two weeks before being shot and recaptured. In a densely populated country where an occidental stands out like a sore thumb, this is a tribute to their courage and training. In the noncombat situation, previous studies have shown that 90 percent of accident survivors are rescued within six hours.

Life support equipment frequently proved valuable, even for the aircrews who were captured immediately. Many used their radios while descending in their chutes to contact wingmen or rescue forces. Thus, even when no rescue was possible, the psychological boost of knowing that relatives would be notified of their safe escape from the aircraft was an important factor. Also, contact with wingmen or other aircraft during the descent denied the captors the probable psychological advantage of telling the POWs that no one knew where they were or that they were alive. Almost half of the returnees used their survival radios before capture. (This rate is understandably higher for successful evaders or noncombat ejectees—80 and 62 percent respectively.) One man summed up a rather general feeling:

"The survival radio is the most important piece of gear in this situation."

Six returnees lost their radios and 18 of those who used radios experienced failures. Some of these failures were extremely critical.

"I lost all radio communication after one hour. Rescue would have been successful with a radio. The chopper was overhead."

"I was flying a rescue helicopter, and probably would have been picked up if I hadn't fallen on my radio and broke the damn thing."

"One radio battery was dead; the other lasted less than one hour. This cost me six and one-half years as a POW."

These incidents occurred in 1965 and 1966, before daily battery checks were instituted. Two individuals stated their radios were inadequate, and one expressed a need for a special transmitter:

"I needed a transmitter which could be hidden on a bare body, capable of sending signals, so my movements after capture could have been tracked."

TABLE 1
Life Support Equipment Used

Item	Number Who Used	Percent
Radio	101	48
PLB	46	22
Water	36	17
Knife	27	13
Weapon	11	5
Flashlight	10	5
Voice Attenuator	10	5
Survival Kit	15	7
First Aid Kit	15	7
MK-13 Flares	7	3
Pengun Flares	5	2
Signal Devices (Unspecified)	6	3
Strobe Light	4	2
Tracers	4	2
LPU	4	2
Raft	2	1
Go Pills	1	–

TABLE 2
Survival Problems

Problem	Number Reporting	Percent Reporting
Incapacitated by Injury	44	21
Thirst	34	16
Topography	41	20
Communication	36	17
Darkness	31	15
Confused, Dazed, Disoriented	30	14
Rescue Vehicle/Personnel (None, delayed, shot down, limitations)	51	24
Weather	21	10
Fatigue	16	8
Enemy in Area	21	10
Lack of Survival Equipment	10	5
Exposure	10	5
Poor Physical Condition	9	4
Animals, Insects, etc.	7	3
Hunger	6	3
Survival Equipment Problems	4	2
Miscellaneous	3	1

Admittedly, this is a far-out request, especially since it is common practice to strip captives immediately after capture. Such a transmitter would have to be hidden within the body.

The personnel locator beacon was used by 22 percent of the POWs—nearly as frequently as among those who were recovered (27 percent) and more often than the noncombat group (14 percent). During part of the reporting period, beacons in some aircraft were not automatic.

Following radios and beacons, the most used item was water. Nearly all who were forced to leave their aircraft in Southeast Asia (SEA) expressed a profound need for water. Thirty-six of the returnees specifically mentioned using water prior to capture. Five others needed more water than they carried. One cut a banana tree and drank the water which collected in the stump—a procedure taught in the Jungle Survival School. Two reported losing their water flasks during ejection, and one flask failed.

Knives are probably the most classic of survival tools. They were used by 13 percent of the returnees and 10 percent of the successful evaders. Six returnees lost their knives, and one found his inadequate—he wanted a machete, a questionable request when silence and covert action are necessary to avoid capture. However, even small knives served well.

"I lost the leg of my 'G' suit due to violent ejection—with it went my MC-1 knife and flashlight. The small knife in the parachute was invaluable."

Another man was captured because of a problem with his knife.

"Couldn't unfasten straps on my survival kit. Couldn't cut them, because survival knife was tied to my harness with nylon, and I couldn't untie the knot. Couldn't cut the knot, because I lost my pocket knife on ejection. Finally, I forced the knife blade through the leather sheath, and was cutting the straps when I was surrounded."

First aid kits were next in order of usage—seven percent (compared to four percent for the successful evaders). The same number of returnees, 15 (seven percent), reported opening and using items from their survival kits. The others got along with the items in their survival vests.

In previous studies it was reported that about five percent of the aircrews rescued in SEA used their sidearms. Interestingly, the same rate of usage applies to the returnees. However, two returnees expressed conflicting views of personal weapons:

"Rather than a large caliber sidearm which was a good signaling device but a poor survival weapon, aircrews should have a small caliber weapon with a silencer and large clips of ammunition, such as a .22 with a silencer."

"I continue to have reservations about carrying a weapon. I was captured immediately—another American weapon for their arsenal."

Ten returnees reported using their flashlights. This was somewhat surprising in view of the need to remain hidden. However, in the deep blackness of a jungle night, some illumination is required for most tasks. Only two percent of the successful evaders reported using flashlights.

Signals have predominated among survival items in previous studies. For example, about half of the successful evaders in SEA reported using visual signals such as flares, strobe lights, mirrors or tracers. In contrast, only 26 of the returnees said they used these signals. In most cases there was simply no one to signal, because they were in an area where rescue was impossible or there was no time. Only one man reported a signal failure—a pengun flare. Four individuals stated they needed visual signals and didn't have them.

A small percentage of the returnees reported needing items of equipment in addition to what they carried. However, there was no trend. Among the items mentioned were burn ointment, burn treatment instructions, rations, bandages, luminous button compass, morphine, machete, map, and a helmet radio jack. None of these items was reported as needed by more than one percent of the returnees responding to the questionnaire, even though this question was specifically asked. Evasion in the heart of a hostile country is a tough challenge. One returnee said the item he needed most was "vanishing cream." Another wanted wings. Still another expressed a more practical requirement:

"I was captured on the third day by a dog. Perhaps pepper in the survival kit would help when the enemy uses dogs."

One felt he was carrying too much equipment:

"I feel we were overloaded with equipment for this environment—to the point of being encumbered in the cockpit."

Such comments were definitely the exception rather than the rule, and most of the reporting returnees were very satisfied with their life support equipment.

Although water landings were quite rare, two individuals used their rafts, and four used life preservers. One of these made a pertinent observation:

"Recommend a method be devised for automatic actuation of LPU upon immersion in water . . . . I was rendered unconscious by the windblast from an excessively high-speed ejection. I remained unconscious for about 15 minutes. Had I landed in a nearby river, or any body of water, I would have drowned. How many did we lose in VN this way?"

Continued on page 43

USAAAVS

System Safety- A New Doctrine For A New Era

Lieutenant Colonel William F. Gabella
Directorate for Technical Research and Applications
U. S. Army Agency for Aviation Safety

In parts I and II of an article entitled "Pilot-Error Accidents Aren't All Pilot" published in the January and February 1975 issues of the ARMY AVIATION DIGEST, USAAAVS explained how inadequacies in elements of the aviation system can overload the pilot, causing him to commit errors which may cause or contribute to accidents. One of the elements contributing to task overloading is equipment design.

The Army system safety program reduces and eliminates equipment failures and design inadequacies which impose an overload on man.

This article shows how system safety engineering is applied to aviation systems from concept through development and also lists some of the system safety dividends integrated into future aircraft design.

THE U.S. ARMY has made dramatic strides in the field of system safety during the past few years in the complex and sensitive "concept-through-procurement" phase of new aviation system development.

These achievements represent a major effort, orchestrated by the U.S. Army Agency for Aviation Safety (USAAAVS) as the Department of Army staff proponent for aviation system safety, in concert with a host of Army agencies, DA staff and major aerospace contractors. Most importantly, the "safety dividends" spinning off from this system safety effort offer the promise of previously unheard of levels of aviation mission accomplishment for the Field Army commander of the 1980's and the 1990's.

Before examining these system safety achievements in detail, it would be useful to define system safety, to review the DOD and DA requirements for system safety and to explain how system safety is achieved through a practical management effort.

Both DOD Military Standard 882 (Requirements for System Safety—USAF proponent) and Army Regulation 385-16 (System Safety—The Inspector General proponent) define system safety as: "The optimum degree of safety within the constraints of operational effectiveness, time, and cost, attained through specific application of systems management and engineering principles throughout all phases of a system's life cycle."

Stated another way, system safety is a philosophy of *risk management* which addresses the life cycle of a system from concept to disposal. By applying consolidated and coordinated management and engineering effort to optimize safety, systems' effectiveness is increased by increasing availability (freedom from accidental loss), dependability (safe design) and capability (safe and assured performance) (figure 1).

The doctrine for Army aviation system safety developed by USAAAVS is one of total safety management (risk management) which integrates all the other "ilities" that impact the reliability, maintainability and survivability of a modern Army aviation system (figure 2).

It is important to emphasize that system safety does not fall into the category of either "goldplating" or "nice to have." This is evidenced by the chain of regulatory authority for this newest of assurance sciences:

- Executive Order 11612 – which directed the Armed Forces to ensure that members of the uniformed services would enjoy the same standards of safety as that of the civil populace.
- DOD Directive 5000.1—the famous "Packard letter" which placed emphasis on various means of reducing technical risk in new weapons systems.
- DOD Directive 1000.3 – which directed the Armed Forces to use Military Standard 882 as a guide to implement system safety in acquisition programs.
- Military Standard 882—"Requirements for System Safety Program for Systems and Associated Subsystems and Equipment."

• Army Regulation 385-16—"System Safety" assigns responsibilities for system safety to Department of the Army staff elements, major commands and agencies. USAAAVS is assigned DA staff supervisory responsibility for aviation system safety.

• Army Regulation 10-29—"Organization and Functions of the U.S. Army Agency for Aviation Safety" details the agency responsibility for aviation system safety.

• USAAAVS Technical Report 72-8—"Preparation of a System Safety Program Plan for Aviation Systems" translates the general requirements of MIL-STD-882 into practical procedures tailored to the Army aviation system acquisition process.

Notwithstanding these mandatory requirements, there are two key elements to system safety which must be made operative early in the system acquisition process in order to ensure an effective and successful system safety effort. These two elements are timeliness and hazard analyses.

The importance of timeliness in the system safety effort cannot be overemphasized. While system safety addresses the entire life cycle of a new system the overwhelming bulk of this effort must be input during the critical concept and development phases of the new system's lifespan (figure 3).

Equally important is the organization of hazard analyses in the system safety program plan (table 1) whose elements are keyed to the system safety process (figure 4). At the heart of this analytical effort are the informal and formal hazard analyses which range from daily monitoring of drawing board design effort by "safety focal points" within the contractor organization to comprehensive analytical reviews of complex subsystems which may comprise a mix of safety trade studies, failure modes effects analyses, fault tree analyses and "sneak circuit" analysis.

The key point that emerges here is that it is patently impossible to apply a full-scale system safety program to a new aviation system beyond the development phase of the acquisition program. Any attempt to do so at this point in the acquisition process deteriorates to nothing more than an expensive "Modification Work Order" process that is costly both in personnel and fiscal resources as well as loss of public (taxpayer) confidence.

A highly qualified exception to this rule exists however with respect to *limited* system safety efforts applied to current inventory aircraft originally produced without a system safety effort. In this case, the system safety effort would address subsystems selected for major product improvement.

SYSTEM SAFETY IN ACTION. In practice, the steps for including system safety into the aviation system development process include:

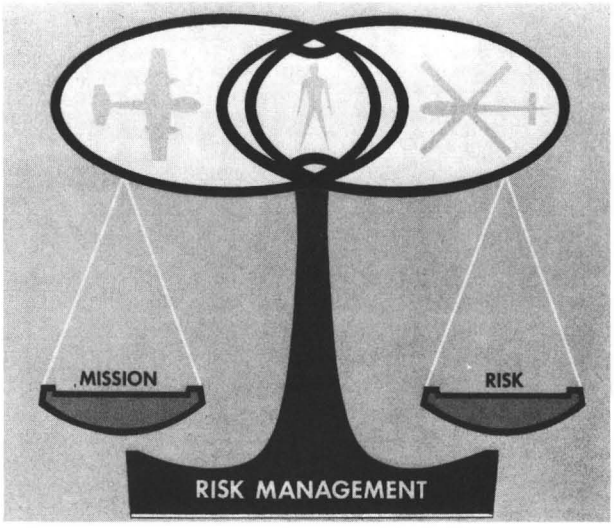

FIGURE 1
System Safety is Risk Management

FIGURE 2
System Safety Management "Umbrella"

• Participation in conceptual studies that define the new system.

• Participation in Source Selection and Evaluation Board (SSEB) activities. Specifically, this includes communicating system safety requirements to contractors and evaluating safety aspects of prospective contractor's submissions.

• Assisting successful bidder through timely aircraft mishap studies and data retrieval in order to influence safe design of the system and associate subsystems.

• Monitoring—both informally and formally—contractor's design effort.

• Providing a tri-service interface to the contrac-

tor through coordination with the U.S. Air Force and U.S. Navy safety centers.

• Evaluating safety characteristics of competing aviation systems after competitive fly-off's.

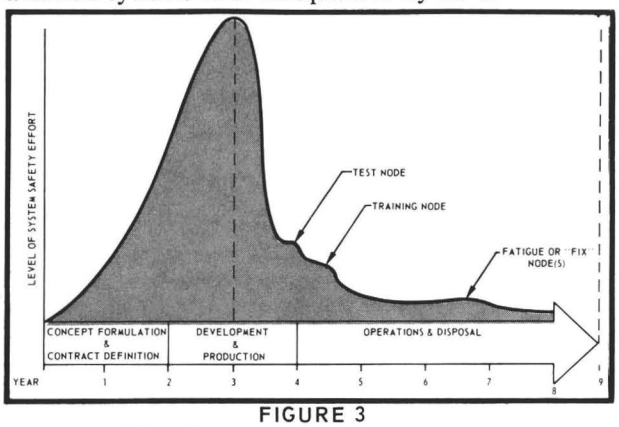

FIGURE 3
"Type" Aviation System Life Cycle

TABLE 1
System Safety Program Plan Outline

1. GENERAL
   a. System Safety Organization
   b. Scope
   c. Purpose
   d. Objective
   e. Definitions
   f. Referenced Documents
2. SSP TASKS AND SCHEDULES
3. SSP MILESTONES
4. SYSTEM SAFETY CRITERIA
   a. System Safety Design Criteria
   b. Acquisition and Use of Safety Data
   c. System Safety Precedence
5. HAZARD ANALYSES
   a. Preliminary Hazard Analysis
   b. Subsystem Hazard Analyses
   c. System Hazard Analysis
   d. Operating Hazard Analyses
   e. Maintenance Hazard Analysis
6. HAZARD CATEGORIZATION AND EVALUATION
7. ACTION ON IDENTIFIED HAZARDS
8. REVIEWS
   a. Program
   b. Design
   c. Progress/Status Meetings
9. SAFETY TESTING
10. AIRWORTHINESS QUALIFICATION
11. RELATED ACTIVITIES
   a. Integration of Associated Disciplines
      (1) Reliability
      (2) Maintainability
      (3) Survivability and Vulnerability
      (4) Human Factors Engineering
      (5) Quality Program
      (6) Industrial Safety
      (7) Operational Safety
   b. Training
   c. Integration with other major subsystems
      (1) Subcontractor/vendor/supplier SSPs
      (2) Integration of other SSPs
   d. Miscellaneous System Safety Activities
      (1) Ground Handling
      (2) Storage
      (3) Servicing
      (4) Transportation
      (5) Facilities
      (6) Support requirements

APPENDICES

SYSTEM SAFETY DIVIDENDS. Historically, 1971 was the watershed year for integrating system safety into the Army aviation system acquisition process when the Heavy Lift Helicopter Advanced Technology and Concepts (HLH-ATC) program included the first contractual requirement for a system safety program. In quick succession came contractually required system safety programs for the GE XT-700 engine, the Utility Tactical Transport Aircraft System and, in 1972, the Advanced Attack Helicopter. Following shortly after were system safety programs for HLH prototype aircraft and the Allison XT-701 engine for the HLH.

The results of the efforts expended by both the Army and the new systems contractors—notwithstanding the fact that both parties were "climbing the learning curve"—have led to some remarkable and even dramatic safety dividends. The following is only a partial list of some of the nonclassified and nonproprietary safety achievements recorded to date:

HEAVY LIFT HELICOPTER SAFETY DIVIDENDS

• Three-wire "fly-by-wire" flight control system can operate with two channels inoperative.

• All transmissions are capable of operating for

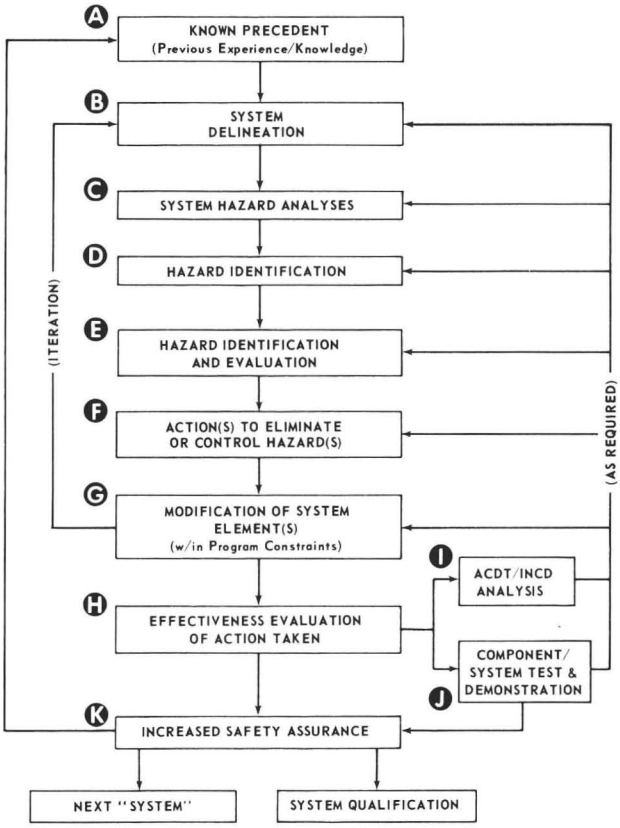

FIGURE 4
System Safety Process

30 minutes after loss of lubrication.

- Rotor blade improvements.
  - —Multiple flight dynamic load paths
  - —Advanced technology "S-Glas" fiberglass spar featuring high damage tolerance and slow crack propagation
  - —Lightning strike protection
  - —100-hour flight life after development of blade crack
  - —Internal blade crack detection system (ISIS)
- Improved crashworthy fuel tanks located outside of occupied airframe area and away from likely ignition sources.
- Improved crashworthiness features.
  - —Impact tolerant rotor blades
  - —Overstrength transmission mounts
  - —Overstrength transmission mounts and fail-safe engine mounts
  - —Landing gear capable of absorbing 16 feet-per-second impact
  - —Crashworthy crew seating
  - —Inertia reel escape system for crewmembers
  - —Nose gear strut redesigned to prevent it from entering occupiable airframe structure
  - —Engines remote from fuel tanks
- Potential for catastrophic engine turbine wheel burst eliminated through progressive unloading of wheel.
- "Tell-torque" bolts in pitch housing which give visual color indications to indicate whether bolt is torqued properly.
- Self-retaining bolts in main drive shaft couplings.
- Redundant load paths in hub, upper controls, hub lugs and pitch housing.
- Generator overheat detection system.
- Dual engine overspeed sensors.
- Optical and heat fire detection systems.
- Safety harness hardpoints strategically located on airframe for use by ground maintenance personnel.
- Cargo handling system.
  - —Two-point, stabilized suspension system for external loads
  - —Dual ballistic cable cutters
  - —Advanced design air turbine motor to winch external loads. Motor has inherent braking characteristics.
  - —Failure of air pressure or torque results in automatic braking or air turbine hoist
- Elimination of catastrophic "whirl-mode" frequency between engines and combining transmission.

UTTAS AND AAH SAFETY GAINS

- Integral engine and APU fire suppression systems.
- Crash force attenuating landing gear can absorb 1,200 feet-per-minute impact.
- Delethalization of occupiable volume.
- Fuselage designed to minimize "earth plowing" effect in crash.
- Tail rotor drive and couplings tolerant to one lug or bolt loss.
- Improved crashworthy fuel systems.
- Crashworthy crew and passenger seating.
- Increased transmission "tiedown" strength.
- Tail rotor tolerant to loss of one pitch change link.
- Cruise flight can be maintained after loss of either or both tail rotor and tail rotor gearbox.
- Main rotor blades can sustain impact with 6-inch branch/tree without failing.
- Main rotor crack failure detection systems.
- Tail rotor protected from ground/object contact by tail boom.
- Flight controls.
  - —Antijam design
  - —Two dual and independent flight control systems from cockpit to hydraulic actuators
  - —All fasteners self-retaining
- Transmission capable of 2-hour flight after loss of lubrication.
- Tail rotor can sustain impact with 3-inch hardwood dowel without failure.

USAAAVS "SPREDS" SYSTEM. Because of the complexity and enormity of "tracking" a new system throughout its life cycle from the standpoint of system safety, USAAAVS recently developed a computer-based program called the "Safety Problem Reporting and Editing System" (SPREDS). The purpose of SPREDS is manifold but was primarily conceived to:

- Ensure that no unresolved, or open, safety problems or areas of safety concerned are overlooked during the system development phase.
- Ensure that all "loops are closed" before initiation of first flights and experimental flight test programs, i.e., validate contractors' safety statements.
- Ensure a continuity of system safety effort regardless of personnel turnover and program changes.

As designed, the SPREDS system offers the Army an excellent opportunity to monitor the entire life cycle of new aviation systems and to generate data from which to explore the "terra incognita" of *operational* system safety—an area about which not much is yet known.

In conclusion, the development and exercise of a practical doctrine for aviation system safety in the Army promises not only the ultimate in Army aviation mission accomplishment on the battlefield of the future but also an incalculable saving in human life and materiel resources.

I'm always looking for new ideas and ways to improve your aviation accident prevention programs so I can pass them along to you. Here's a good idea for a safety display taken from a report prepared by Captain David B. Anderson, Ph.D., U.S. Army Aeromedical Research Laboratory, Ft. Rucker

Ten to twelve percent of Army aircraft mishaps for FY 1967 through FY 1973 occurred during the takeoff phase. This may not sound like a big deal, but if you consider the percentage of time in the takeoff phase as compared to the remainder of the flight, it takes on an added significance. It's important for you to know the forced landing areas around your airfield because in an emergency requiring an immediate landing, knowing the area can make the difference between a successful and unsuccessful landing.

You may think you're familiar with these forced landing areas, but can you remember what the terrain features are like at the end of each runway? Do you know where all the wires, fences and other obstructions are?

Some aviators are more familiar with forced landing areas than others because the types of aircraft they fly provide good visibility. But what about the aviators who are not so familiar with these areas? Want to help them prepare for a forced landing on takeoff?

Make a photo display board like the one shown here and put it in a conspicuous place in the operations office. Obtain aerial photographs of the takeoff ends of all runways as well as an overall view of your airfield. Use colored tape on the photographs to indicate locations of powerlines and fences. Prepare an overall legend for the display board and list on the bottom important factors affecting forced landing area selection, such as wind direction and velocity, available altitude, and terrain and obstructions.

Preflight forced landing area examination is only a small part of the professional aviator's attitude towards aviation safety. The most important consideration in any emergency situation is to fly the aircraft, take charge, use your skill and think. If the information from a good preflight is fresh in your memory, your ability to make an accurate diagnosis in an emergency situation will be greatly enhanced.

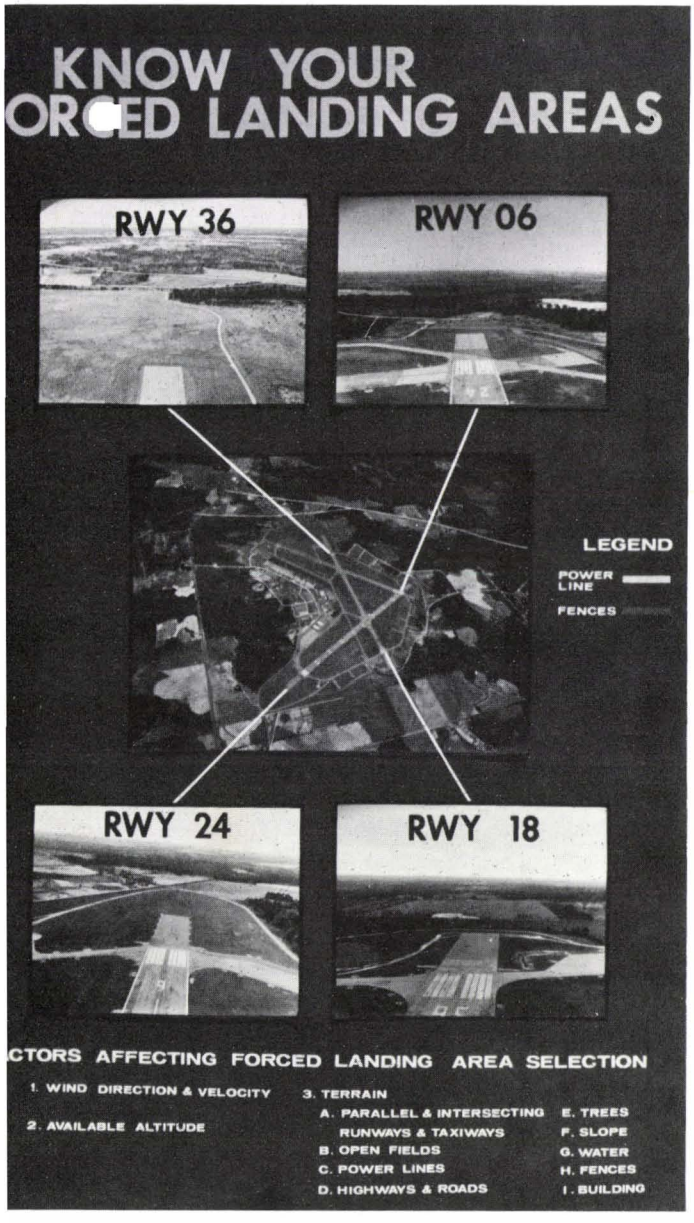

POWs AND LIFE SUPPORT EQUIPMENT

Continued from page 37

The Air Force is actively developing an automatic life preserver.

Only five failures of flotation equipment were reported; however, two life rafts were lost during the ejection sequence and three failed to inflate when the kit was deployed.

The returnees experienced many survival/rescue problems in addition to their injuries. Thirty-four said they suffered from thirst, but only six reported acute hunger.

"I was weak and tired from no food—lost mental acuity. Many people around. If I'd been stronger I probably could have prevented their seeing me and continued to a safe area."

He'd been evading for four days.

One-fifth of the returnees stated the topography worked against them. Almost as many (17 percent) said they had communications problems. A high-speed ejection from a burning or disintegrating aircraft is a harrowing experience at best. When it happens over enemy territory, the physical and psychological pressures are enormous. Fourteen percent of the returnees said they were confused, dazed or disoriented for varying periods after ejecting. Weather had an adverse effect on 10 percent, and five percent complained of exposure.

Fatigue or poor physical condition played a role in a few evasion attempts. Seven men had trouble with insects or animals.

Of course the enemy was the biggest factor in all these cases. Frequently the location of the parachute landing made the outcome of the evasion attempt a foregone conclusion. As one man wryly put it:

"Don't parachute into an enemy camp!"

In other cases injury was the deciding factor—and one returned pilot suggested:

"Don't get hurt."

Probably the best summation of all was simply, "WHEW!"

Although we normally think of life support or survival equipment as serving to get our crewmembers home as soon as possible after a catastrophic airborne emergency, the returnee reports show another facet. Even when the evasion attempt is unsuccessful, life support and survival equipment can help keep the crewman in the best possible shape to withstand the rigors of capture. In the case of the radio and other signals, it can also provide a great psychological boost during a most trying experience. The extreme consequences of even a small failure rate in life support or survival equipment are highlighted in a combat environment.

MISSILE! MISSILE! MISSILE!

continued from page 33

After getting out of the aircraft, I saw that the flames were engulfing the aircraft around the wing stores. I went to the front to check on McKennty and he was hanging upside down in his harness. The turret and skids were torn completely off the aircraft and the main rotor was gone. Part of the tail boom and the tail rotor separated from the aircraft upon impact. McKennty had a lot of blood on his face and Nomex. I crawled in, released him from his harness and pulled him out of the aircraft as far as I could. His feet were tangled in the unstowed sight. The sight should have been stowed. I found out later this was why he was unconscious. He had followed all the right procedures except to stow the sight. He had crossed his arms across his face and put his feet up in the seat but the unstowed sight came up between his arms and hit him in the face.

After pulling McKennty as far as I could from the aircraft, I looked back again to check on the fire. It was only slightly larger than it had been, so I crawled past him and got the fire extinguisher. I pulled it out of the aircraft, but could not pull the safety pin. Checking it, I discovered that someone had safetied it with steel safety wire.

At that time, the OH-6 flew by and I signaled for them to come down and help. The other Cobra was firing rockets into the surrounding area and also firing the turret to keep any unfriendlies in the area away from us. We found out later that many enemy soldiers were in the area. I finally got McKennty's feet untangled from the sight and pulled him about 6 to 8 feet away from the aircraft where he became semiconscious. I held him under his arms and was starting away from the wreckage when I heard the C&C bird landing approximately 100 yards from us. We fell several times but finally made it to the C&C ship where we were helped aboard.

It's very true that when you leave an aircraft like we did, all you take with you is what is on you. My survival vest was in the back of the aircraft. McKennty had his survival vest on. He also had his .38 caliber pistol with about 12 rounds of ammunition. I had a 9mm pistol with about 62 rounds and we left two Car 15s in the aircraft with about 150 rounds of ammunition.

As we left the area in the C&C bird, we were taking fire and returning fire. We headed toward an airfield where we changed aircraft and were taken directly to the hospital. McKennty was stitched up and I was treated for burns. After this experience, my belief in the value of life support equipment has been reconfirmed. I received second- and third-degree burns on my left arm, shoulder and side and on the back of my neck. As a point of interest, had my Nomex collar been up, I would not have received any burns on the back of my neck.

I was wearing a cotton T-shirt under my Nomex. The worst burn I received began at a point just below where the sleeve of the T-shirt ended on my left arm where the Nomex had burned completely through. So the more layers of clothing you have on, no matter what the climate, the better protected you are from burns.

I have noticed the controversy over cotton patches and cotton name tags on Nomex flight suits. In my opinion, every bit of protection you can get, particularly if it's cotton, sewed to your Nomex does help. I still have the Nomex I was wearing and the left sleeve is burned completely through. One spot is ripped down where they took it off me. The left shoulder has a First Cavalry patch on it and the patch is made of cotton. There is no damage to the patch whatsoever and the Nomex is completely brittle and burned around the patch. The thing that probably kept me from getting even worse burns was the fact that I was wearing the aircrewman-type chicken plate chest protector. Postaccident inspection of the chicken plate revealed that the top portion on the back and the front portion were badly burned. The white plastic foam on the inside of my helmet looked like roasted marshmallows. The top of my helmet had bubbles on it and the radio mike cord was completely burned through and blistered. The right ear piece on my helmet, the fiberglass portion, had a four-pointed crack in it. Apparently I hit my head on something and I had no knowledge of it whatsoever, no bruises or anything.

Inspection of the records revealed that our aircraft was the only one in the unit without a crashworthy fuel system. Also, I personally checked all

the fire extinguishers when I got back from the hospital and the one in this aircraft was the only one that had been safetied with steel safety wire.

I feel there are several other reasons why we survived this particular accident. One was that the missile did not hit a very critical portion of the aircraft, for example, the rotor system or tail boom. Another thing that helped us was the fact that McKennty did everything in his power to do exactly what I asked of him, plus trying other things and suggesting things all the way down.

I had heard about what CPT Brown had said after he survived an SA7 missile hit and one thing that he mentioned went through my mind as I was going down. He said that he had watched the rpm build and had not really worried about it. I had thought about the same thing because the rpm on my aircraft continued to build into the high green and at that time I quit worrying about the rotor rpm and started worrying about where we were going and what we were going to do when we got there. As CPT Brown said, you think you're dead, but never quit trying. Don't just give up.

Another thing that helped me was the time I had spent at Fort Rucker as an instructor pilot. The emergency procedures we went through were by the book and they were also done by the numbers.

MR. MONETTE: About four weeks after Rinehart was shot down, we were doing a visual recon of an area where an enemy convoy was suspected of being the night before. During our recon we got word there was a sampan moving up the river to the west of us. We received clearance to fire on the sampan and were vectored to the area. The low bird came in and I was trailing. We were all low level.

The low bird picked up the sampan and noticed a few very nice clean round cylindrical-type objects in the bottom of it. It had pulled into a rather thick underbrush of bamboo. The low bird made his recon, told us what was in there and marked the area where the sampan was. It was out of visual contact with us. We made several runs on the target and then the scout reentered the area. We had not destroyed the boat. We had been circling the area for about 10 minutes when I told my team leader that we'd better do something or get out before somebody was killed.

We decided to make one more run and as the other Cobra made his run, I covered him on his break. As I sprayed the area with my 20mm I faked a break to the right because I was low level going over the target. I broke to the right and then to the left. As I broke to the left it felt like somebody hit the underside of my aircraft with a sledge hammer. At that time I thought I had been hit in the 20mm ammo bay compartment. As I looked back over my left shoulder I saw a large piece of burning material flying from the aircraft. At that time I didn't know what it was but I told everybody I had been hit. I told my low bird to lead out and give me a possible route with the least amount of trees and foliage—give me the most cleared area. I coordinated with my team C&C bird and he also helped me fly back over the most open areas.

I don't understand why the man in the sampan didn't shoot at the C&C aircraft which was right over him. It was probably the 20mm fire. At the last minute he probably decided he'd better do something before it was too late. He may have just stuck his head out of a hole and fired the missile. When he fired he probably thought we would leave the area when we saw the smoke trail. Staying on station as long as we did was a no-no. It was a known enemy area and we were low level.

It is my understanding that it takes 900 meters for the SA7 missile to actually arm and I think my distance from the point of firing to the point of impact was about 300 to 400 meters at the most.

During the flight back my team leader flew up to my right side, gave me a visual okay, dropped back, flew over to my left side and gave me a visual okay that there was no major damage to my aircraft. I had no idea I was hit in the blade. I dropped my airspeed back to a comfortable speed and flew back at 100 knots. I felt nothing through the controls except that when the missile hit me it felt like somebody gave me a big bang with a sledge hammer and lifted me up a couple of feet and set me back down. After landing we noticed that the missile had hit my blades approximately one foot back from the retaining end of the blade. There was a hole all the way through the blade. Now the fact that the missile even hit me and the fact that it hit me in the blade I attribute to pure luck.

•••

For every offensive weapon developed by hostile forces, a defensive weapon or tactic must also be developed. The IR kits installed on our aircraft reduced the effectiveness of the SA7 missile and evasive maneuvers also helped. But neither is completely effective as pointed out here. NOE flight is designed to be the defensive tactic that will make the SA7 and other offensive weapons ineffective against our helicopters. As other offensive weapons are introduced by hostile forces, the challenge will be met with a better defense.

AN/PRC-90 Survival Radio

Your article in the November 1974 issue was incomplete as to the official procedure for ordering survival radios. It was also confusing as to the priority for ordering these radios.

Our unit supply operates under the D Log system and we have had the AN/PRC-90 on a valid (updated monthly by computer) order for 9 months. Should we cancel this order request under D Log and requisition directly through the Electronics Command?

The current standard "A" survival radio for the U.S. Army is the AN/PRC-90. This radio was discussed in the PEARL column of the January 1974 AVIATION DIGEST. The U.S. Air Force is administering the procurement contract for the AN/PRC-90 survival radios. Presently, the supply of radios is not adequate to meet the needs of all services. To ensure that the needs of the Army are best satisfied, the Electronics Command (ECOM) presently approves and releases for shipment all requisitions for the survival radios. USAAAVS recommends you use the highest priority that can be justified. ECOM is presently approving all priority requisitions. As more radios become available, the stringent controls will be lifted.

Individual Dash 10s

The National Guard aviators do not have the availability of dash 10s other aviators have. Granted, we have a dash 10 in our unit library; however, the Guard aviators do not have the time available to read while on duty. With only one weekend a month available for training, our time is consumed flying missions, acquiring our minimums and getting inclement weather training.

If each aviator had his own copy, I am sure the dash 10s would be read on his own time. Therefore he would be more knowledgeable in the aircraft he flies and consequently a safer aviator.

Therefore, I would like to know how we can order individual copies of dash 10s for each aviator for each model aircraft in which he is maintaining currency. We would be willing to pay for them if necessary if they can be obtained through the Government Printing Office.

Provisions for your requirements for dash 10s are outlined in paragraph 3-36, Army Regulation 310-2, Change 3, dated 23 September 1973, which states "the purchase of DA publications by military personnel and civilian employees for the performance of official duties or otherwise for the benefit of the service is discouraged. Commanders will provide their personnel all official publications required for or in connection with effective performance of duty." Chapter 3, AR 310-2, establishes requisition and distribution procedures for publications. Additionally, paragraph 3, AR 750-31, lists publications and forms that must be maintained in aircraft. The issuance of dash 10s on an individual basis is not without problems, e.g., loss, abuse and the difficulty of ensuring currency. To be successful, your program will have to be well managed—equal to an efficient library.

To improve aviator knowledge of his aircraft, some units have devised open-book examinations. These examinations are administered before standardization rides and during periods of low workload.

UH-1 and OH-58A Survival Kits

My unit is a general support company. Currently we are stationed in the Republic of Korea. Due to our mission, many long distance flights are made over inhospitable country.

I am in the process of obtaining information on survival gear. What I need is information on a group survival kit for UH-1s and an individual kit for OH-58As. In addition, I would like information on hot and cold climate survival kits.

The U.S. Army has not adopted the practice of developing group kits for aircraft. All kits are individual type. Common Table of Allowances (CTA) 50-900 dated 15 November 1973 lists available survival kits on pages II-68 and II-69. A kit suitable for use in the OH-58 is the Survival Kit, Individual: Vest Type (SRU-21/P) consisting of components (C/O), NSN 8465-00-177-4819. Technical Manual 55-8465-206-23, dated 26 September 1972, provides information on hot and cold climate survival kits and other survival kits authorized for use aboard U.S. aircraft.

PEARL'S

Personal Equipment & Rescue/Survival Lowdown

If you have a question about personal equipment or rescue/survival gear, write Pearl, USAAAVS, Ft. Rucker, AL 36360

USAAAVS

USAASO Sez

The U. S. Army Aeronautical Services Office discusses

VFR Supplement

The National Microwave Landing System (NMLS)

It Doesn't Tell All! The operating data which accompanies most of the sketches in the VFR Supplement provides very fine reading. Unfortunately, not all of the information can be accommodated or is available on the runway gradients which significantly affect visibility from one threshold to the other at the far and invisible opposite end.

With no wind or light wind conditions prevailing, the option of taxiing to the nearest and most convenient threshold prevails. Simultaneous exercise of this option by aircraft invisible to each other can set up a situation which could spoil their whole (collective) day.

The use of UNICOM (Aeronautical Advisory Stations) facility, if available, can alleviate this situation if used and monitored properly to determine intentions of local or itinerate traffic. However, the UNICOM is advisory only and frequently and most commonly does not command the surveillance capability or authority resident in tower operational facilities. So beware of the potential "spoil your day" danger which the coffee stop airstrip may present in your next cross-country. Flying the "hump" was a real World War II heady adventure—don't let the local "hump" on the unfamiliar airstrip invite some unscheduled excitement with a head-on meeting!

Look out, here it comes! Yeah, that's right, the guys up in the big headshed have dreamed up a new system that will replace our aging instrument landing system (ILS) and ground controlled approach (GCA) landing system. The target for initial ground system installation is 1977. This new NMLS has been a long time in coming but it looks as though it's the answer to our needs.

An outfit named the Radio Technical Commission for Aeronautics (RTCA) organized a special committee of dreamers, schemers, aviators and technical masterminds to develop a recommended new approach to replacing the ILS. These guys turned out a terrific final report which is realistic and has now become the basis for the NMLS. From here the Federal Aviation Administration took over and drew up a five year plan to develop the NMLS. Well, we are now in the third year of the development program with lots of hardware-testing hours under the belt. We've had a good look at four different types of hardware, and a high level interdepartmental group (Department of Transportation, Department of Defense and National Aviation and Space Agency) will make a decision early this year on what the final system configuration will be.

It's pretty hard to describe just what NMLS is in this one short blurb, so we're just gonna ease this one on you now and follow-up with more later.

Only Hanoi Knows For Sure...

. . . but you may be able to help in the continuing search for the missing in action. If you know of any combat or operational losses of aircraft in Southeast Asia please get in touch with the JCRC at the address given below

THE JOINT CASUALTY Resolution Center (JCRC) is still seeking, from all available sources, any additional information on combat and any other operational losses of aircraft in Southeast Asia (SEA). This information will be processed into JCRC's extensive computer bank and correlated with existing data in upgrading an Aircraft All Loss Report used by the JCRC in accomplishing its difficult mission. If you were involved in, associated with, or know of an aircraft loss in SEA anytime between the beginning of the conflict and the cease-fire date—you could be of assistance in the casualty resolution of our missing comrades in arms!

Navy, Air Force and Army aviators with aircraft accident investigation experience are assigned to JCRC in Thailand as Crash Site Investigators (CSI). The CSI mission is to investigate all aircraft located at crash sites in SEA and to identify the subject aircraft by bureau/tail number to determine if personnel carried in a MIA (missing in action) status could be associated with the wreckage. This is a difficult task, for available wreckage usually contains only limited clues with which to work. In many cases, tail numbers cannot be located or identified in the crash site debris and parts research must be conducted on whatever serialized components can be found at the site. This entails endless inquiries, review and examination of maintenance records in an attempt to trace component serial numbers to an aircraft tail number.

DO YOUR PART! Forward any information you may have on the date of loss, type aircraft, bureau or tail number and the exact location (UTM—universal transverse mercator—coordinates or latitude/longitude coordinates to seconds) of the wreckage. Any amplifying information that can be recalled would aid. Please address correspondence to: Headquarters, Joint Casualty Resolution Center, ATTN: CDD-CSI, APO San Francisco 96232. At your discretion, include your name, address and phone number in the event further details are needed.

if you have information please don't delay . . . contact the JCRC today!

NEW GLOVES

The new, improved flight gloves are available. As a result of Equipment Improvement Recommendations (EIRs) from the field, the gauntlets are 1 inch longer to prevent separation between the gloves and sleeves of the flight suit, thus providing better thermal protection. The gloves are sewn with a non-melting filament Nomex thread and the thumb seam is double-stitched to help prevent seam separation. Special processing has made the leather perspiration resistant and, therefore, more durable.

The new flyer's summer gloves, GS/FRP-2, come in five sizes:

Size	NSN
7	8415-00-139-5408
8	8415-00-139-5409
9	8415-00-139-5410
10	8415-00-139-5411
11	8415-00-139-5412

You'll find washing instructions inserted in the right glove.

This is the eighth of 12 back covers designed to show personal survival, rescue and protective equipment. Detach this cover for your bulletin board display of the more important survival and protective equipment available to crewmembers.

8 USAAAVS OF 12