UNITED STATES ARMY JULY 1965

AVIATION DIGEST

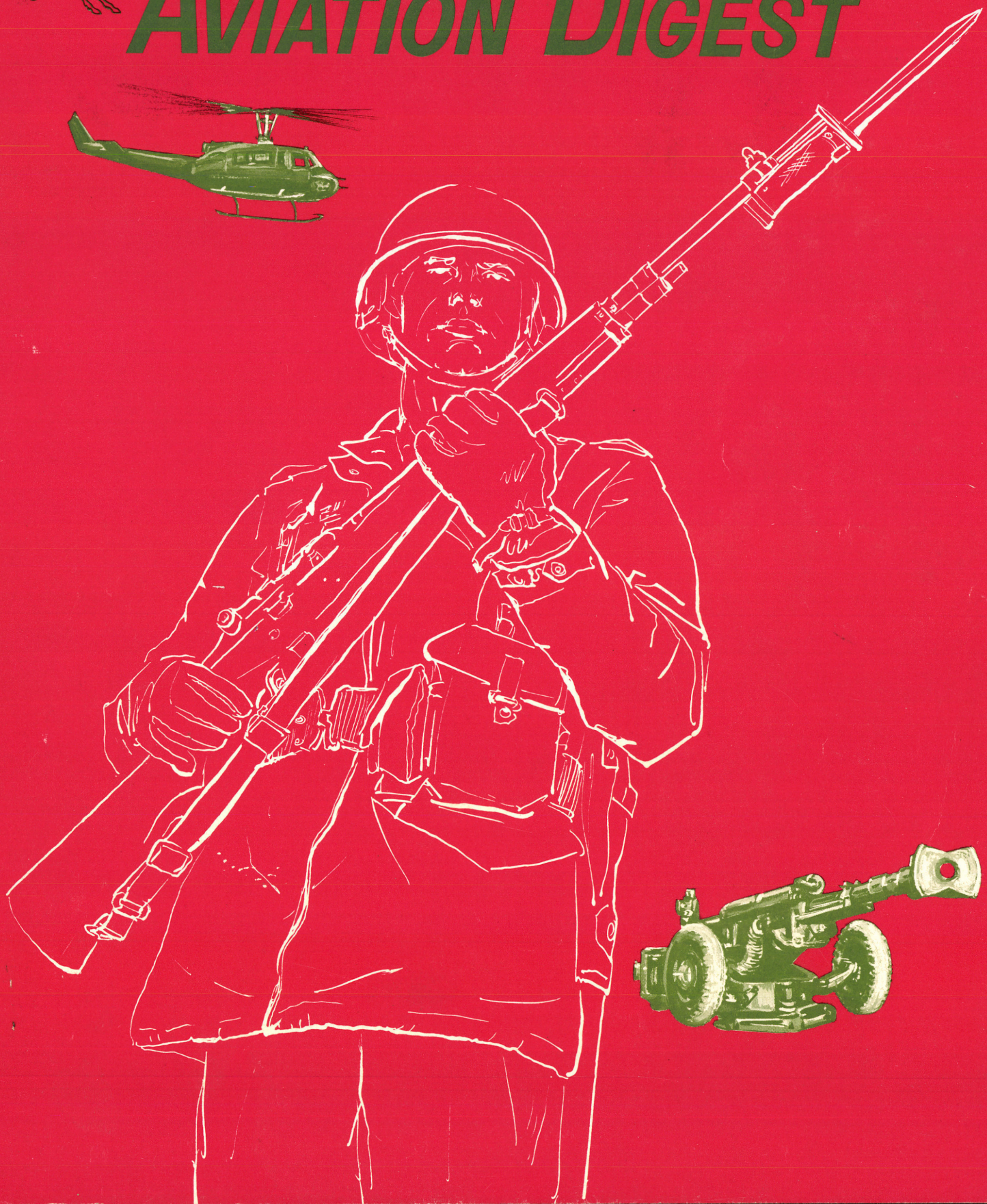

UNITED STATES ARMY AVIATION DIGEST

JULY 1965 VOLUME 11 NUMBER 7

DIRECTOR OF ARMY AVIATION, ACSFOR
DEPARTMENT OF THE ARMY
Col George P. Seneff, Jr.

COMMANDANT, U. S. ARMY AVIATION SCHOOL
Maj Gen John J. Tolson, III

ASST COMDT, U. S. ARMY AVIATION SCHOOL
Col George W. Putnam, Jr.

EDITORIAL STAFF

Capt Richard C. Anglin
Fred M. Montgomery
Richard K. Tierney
William H. Smith
Diana G. Williams

GRAPHIC ART SUPPORT

H. G. Linn
H. A. Pickel
D. L. Crowley
A. Lofé

USABAAR EDUCATION AND LITERATURE DIV

Pierce L. Wiggin
William E. Carter
Ted Kontos
Charles Mabius

CONTENTS

Divarty Fullback, Col William A. Becker 1

Battlefield Artillery Airmobility Concepts, Capt David L. Johnson and Lt James H. Fitzgerald 8

New Kind of War, Maj Frederick L. Clapp 12

Set the Right Example, Maj Jack J. Nelson 20

Crash and Carry 22

Research in Motion, Richard K. Tierney 24

Out of the Valley at :40, Capt Thomas O. Kuypers 29

Capt Horatio Frozzleforth, ASO, Pierce Wiggin 32

The Accident and Cause Factors, Capt D. V. Wood 38

Tilt, Barney Roth 40

A Pilot Worth His Salt 44

Crash Sense 45

New Heights 48

Annual Awards Back Cover

The mission of the U. S. ARMY AVIATION DIGEST is to provide information of an operational or functional nature concerning safety and aircraft accident prevention, training, maintenance, operations, research and development, aviation medicine, and other related data.

The DIGEST is an official Department of the Army periodical published monthly under the supervision of the Commandant, U. S. Army Aviation School. Views expressed herein are not necessarily those of Department of the Army or the U. S. Army Aviation School. Photos are U. S. Army unless otherwise specified. Material may be reprinted provided credit is given to the DIGEST and to the author, unless otherwise indicated.

Articles, photos, and items of interest on Army Aviation are invited. *Direct communication is authorized to: Editor-in-Chief, U.S. Army Aviation Digest, Fort Rucker, Alabama.*

Use of funds for printing this publication has been approved by Headquarters, Department of the Army, 29 December 1964.

Active Army units receive distribution under the pinpoint distribution system as outlined in AR 310-1, 20 March 62, and DA Circular 310-57, 14 March 63. Complete DA Form 12-4 and send directly to CO, AG Publications Center, 2800 Eastern Boulevard, Baltimore, Md. For any change in distribution requirements, merely initiate a revised DA Form 12-4.

National Guard and Army Reserve units submit requirements through their state adjutants general and U. S. Army Corps commanders respectively.

For those not eligible for official distribution or who desire personal copies of the DIGEST, paid subscriptions, $4.50 domestic and $5.50 overseas, are available from the Superintendent of Documents, U. S. Government Printing Office, Washington, D. C., 20310.

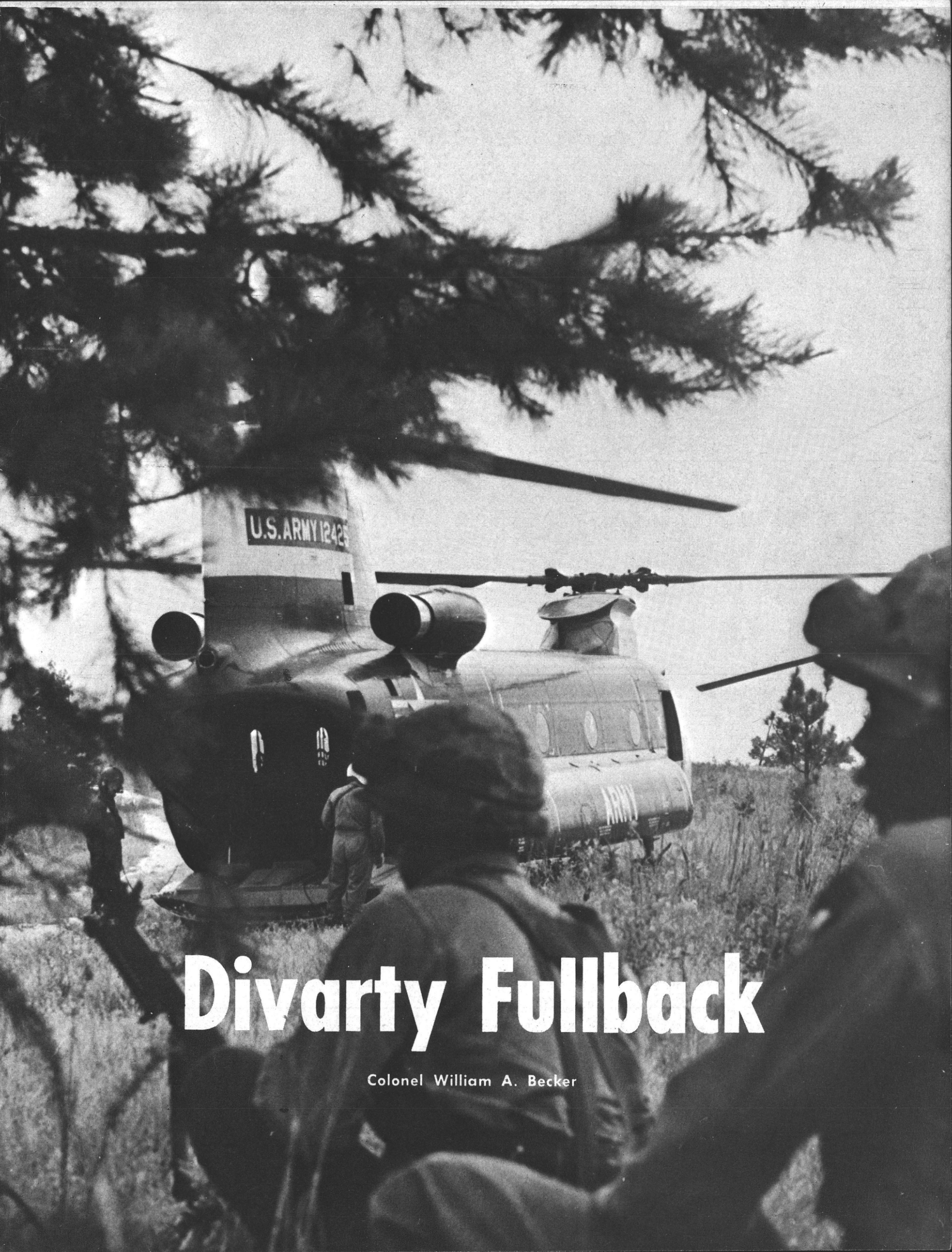

Divarty Fullback

Colonel William A. Becker

the rocket unit can be located behind the supported unit out of range of enemy cannon fire and still accomplish its missions

A "FULLBACK" with power, diversity, and agility has earned a letter with the 11th Air Assault Division and Project TEAM (Test & Evaluation of Airmobility).

The fullback is the 11th's divarty (division artillery) which in maneuvers last year demonstrated some of the most impressive combat effectiveness ever seen on the maneuver battlefield.

The 11th's divarty boasts

- *Agility* in the form of three airmobile 105 mm howitzer battalions which are swiftly transported about the battlefield by Army helicopters and CV-2s and can rain murderous firepower on the enemy wherever the Sky Soldiers engage him.
- *Diversity* in its aerial rocket battalion whose armed UH-1B helicopters can take to the air to deliver suppressive fires or to rip apart more distant enemy formations.
- *Power* in its Little John missile battalion which is moved about by Army helicopters and CV-2s and can deliver the awesome and crushing nuclear warhead as its maximum punch.

Though thousands of words have been written about mobility and firepower, they still add up to one basic formula: the right amount of firepower mixed with the proper amount of mobility equals superior combat effectiveness. The unknowns are the proper amounts of firepower and mobility to mix in given situations. While perfect formulas are being sought throughout the entire 11th Air Assault Division, the results achieved might best be understood by taking a look at the divarty, where the division's greatest firepower is concentrated and married to new concepts of mobility.

Col Becker is commanding officer, 11th Air Assault Division Artillery, Fort Benning, Ga.

HOWITZER BATTALIONS

During Air Assault maneuvers in 1964, divarty had only six of the new M-102, lightweight 105 mm howitzers which were assigned to the 6th Battalion, 81st Artillery. The other two battalions had the heavier M-101A1 105 mm howitzers, but it is hoped they will soon receive the lighter guns.

Unlike the M-101A1 105, the 3,000-pound M-102s can be moved by sling load with the UH-1D equipped with 48-foot blades. During maneuvers, the M-102 battery was quickly and easily moved distances up to 30 kilometers in this manner.

Two UH-1Ds can move a section consisting of one gun, its seven man crew, and a small amount of ammunition. However, three Ds are preferred, since a three-man fire direction center and enough ammunition for initial fire missions must also be moved.

When greater distances are involved, the CH-47A Chinook helicopter can be used. One CH-47 easily moves an entire section of either M-102s or M-101A1s. During maneuvers last year, a battalion was moved 100 kilometers in less than 1½ hours by CH-47s (including loading and unloading). When CH-47s are used to move the howitzers, divarty prefers to carry the guns internally and sling load the ammunition.

Currently no aircraft are organic to the howitzer (or Little John) battalions. UH-1Ds and CH-47s are requested from the division's aviation group through divarty.

Divarty's howitzer battalions depend primarily on mobility for security. Batteries are positioned in areas where access routes available to enemy ground forces are few or nonexistent. Additional protection is obtained from small arms organic to the battalions and other combat units in the division.

It was determined in maneuvers that a howitzer battalion (once the helicopters arrived) could be moved in 10 minutes plus flying time. (The air assault howitzer battalion could move a distance of 40 miles, occupy a position, and begin firing in about the same amount of time it takes a towed 105 howitzer battalion in a ROAD division to accomplish the same with a move of 10 miles.)

ROCKET BATTALION

Divarty's aerial rocket battalion represents a first for the Army. Never before have weapons aircraft been designated specifically for use as artillery pieces. Each aircraft is in effect a self-propelled, airmobile artillery piece capable of firing from one area, immediately flying to another area, and firing again.

The rocket battalion is authorized 39 UH-1Bs—three in Headquarters & Headquarters Battery

and 12 each in the three firing batteries. HQ & HQ battery aircraft are armed with the M-6 kit (two M-60C 7.62 mm machineguns on each side of the aircraft) and are used for command control, liaison, and reconnaissance. Hueys in the firing batteries are used for fire support and are armed with the XM-3 kit (24 2.75″ folding fin rocket tubes mounted on each side of the aircraft) . A Mark 8 reflector sight provides the Hueys (with XM-3s) a direct fire accuracy of 10-15 mils from 1,000-2,000 meters for both deflection and range dispersion.

Currently, the rocket battalion is capable of providing only direct fire support. However, it is hoped that an indirect fire capability can be developed with a rocket such as the 4.5″. Army evaluations in this field are underway. The indirect fire capability would provide sustained fires day and night, and in all extremes of weather. Also, when the enemy forces excessive stand-off for direct fires, the "iron" could still get on the target.

Thanks to its speed and range, the rocket unit can be located behind the supported unit *out of range of enemy cannon fire* and still be able to accomplish its missions. Mobility also allows it to be located in areas extremely difficult for enemy ground units to penetrate.

During 1964 maneuvers, "enemy" ground units twice attacked the rocket battalion while it was positioned in the support role. In one case, the enemy attack came under cover of heavy morning fog, but was still repulsed. In the second case, the enemy force attacked in the afternoon and was destroyed in a counterattack. As soon as an enemy attack hits the

Flying command post is easily, quickly moved from one helicopter to another

battalion's outposts, the Hueys take to the air and launch counterattacks from one or more directions.

The rocket battalion also provides the infantryman with a big assist. For years the Army has been trying to cut the time gap between artillery preparation fire and the assaulting infantryman's arrival at the objective area. In conventional situations the foot soldier has to travel at least 100 yards to the objective after preparatory fire ceases. The time lag allows the enemy to get out of his foxhole and effectively defend against the attack.

In the 11th, the infantryman rides in UH-1Ds along with the rocket-armed UH-1Bs and sets down on or near the objective as soon as the preparatory fire ceases. It must be remembered that this tactic can be used only in specific types of missions, such as when the advantages of shock and surprise can be exploited. The 11th does not use this tactic against extremely heavy-armed and defended positions.

In a typical mission the assaulting units begin moving to the objective area after the Air Force has secured local air superiority. The aerial rocket battalion usually moves up with the lift battalion (Hueys carrying troops) and with the M-6 armed Hueys. At H hour plus 2 minutes the M-6 armed Hueys attack the objective area, and at H plus 1 minute the aerial rocket battalion's UH-1Bs bombard the objective with about half their rockets. The last round goes off 5 to 10 seconds before the infantry arrives in UH-1Ds.

The Hueys (armed with M-6s) and the "artillery ships" orbit in the objective area and move back into action against specific targets when so instructed by a fire support coordinator located with the assault force. The latter also controls fire support from the howitzer battalions and the Little John battalion.

The battalion's UH-1Bs usually attack from two or more directions in either a spread or a trail formation. They generally move to the assault area in a heavy right or left echelon formation. They accomplish about 30-40 percent of their own target acquisition, the rest being detected by divarty LOH and FOs (forward observers), Mohawks, and the cavalry squadron.

During an assault, the rocket ships have adequate loitering time in the objective area. When one element runs low on fuel or am-

In 1962 the Army Tactical Mobility Requirements Board, better known as the Howze Board, called for fresh—and even unorthodox—concepts that would substantially increase Army mobility. During the last two years the 11th Air Assault Division (Test) and the 10th Air Transport Brigade developed and tested some of these concepts.

Of significance is the 11th Air Assault Division Artillery's dependence on Army aircraft as it evolved tactics and techniques for employment of **airmobile artillery.**

The divarty's 105-mm howitzer and Little John battalions are transportable by Army aircraft organic to or immediately available to the division. The primary weapons of the aerial rocket artillery battalion are self-propelled flying artillery pieces—UH-1Bs mounted with XM-3 rocket systems. The division artillery also has an organic aviation battery equipped with helicopters for target acquisition, reconnaissance, and surveillance missions.

RSOP (reconnaissance, selection and occupation of position) has become a new challenge to the airmobile artilleryman. No longer does a relatively large party go forward on the ground to select and prepare a new position area. Rather, because of the speed of operations the battery commander often makes one pass over a suitable area in a Huey or OH-13 provided by the aviation battery and makes a decision "on the spot." Security parties fly in ahead of the batteries, and survey teams accomplish necessary surveys in short periods of time—thanks to helicopters.

Artillery tactics are shaping up to be somewhat different from those considered conventional in the past. In support of assaults by the infantry, direct aerial artillery firepower, with its inherent quick reaction, close-in effectiveness, and selectivity of fires, is

munition, another moves up from a reserve area and replaces it in orbit.

The commander's flying command post consists simply of a map board set inside and hooked to the door of a Huey. The map board can be easily and quickly removed and set up in another aircraft if the need arises. Two PRC-25 radios are used along with the aircraft's organic radio equipment. The battalion S-3 officer, an S-2 sergeant, and a crewchief operate the map board. The battalion commander and another headquarters officer sit up front where they are hooked in with the divarty net and can still control the battalion and provide fire direction information.

During maneuvers, the aerial rocket battalion proved to be effective against "enemy" air defenses. In fact, by employing low-level flight tactics, the battalion successfully attacked some air defense units without being detected.

When the aerial rocket battalion is in forward position, ammunition is generally brought in by CH-47. When it is possible to establish ground supply routes with the division base, 2½-ton trucks help the logistical effort. Otherwise supply is handled entirely by aircraft.

During 1964 maneuvers, the battalion successfully provided support along a division front of 80-120 kilometers and accomplished strikes 60-100 kilometers deep into enemy territory. Since the battalion operated at only two-thirds strength in aircraft, its full potential was not realized.

concentrated in preparatory and suppressive fires until initial objectives are secured.

The aerial rocket artillery battalion plays a big role in reinforcing the ground artillery. Together, they provide continuous day-night, all-weather support. Artillery units accompany the infantry in operation in enemy rear areas. Airmobility reduces artillery security problems. In other situations ground artillery units may be lifted into enemy territory to position as an "island of firepower" secured by air assault infantry to deliver intensive fire on important targets. The force is then withdrawn by Army air.

Aerial and ground artillery units are complementary and must be closely integrated for proper results. Their mission is the same as always: to support the infantry in attaining its objective. To support the flying infantry properly, the artillery must also fly.

We feel that some fresh, and perhaps unorthodox, strides have been taken by the 11th Air Assault Division Artillery in the use of Army aircraft for battlefield mobility. While we have learned much, further development of techniques is a must. We continually seek new techniques for greater mobility and more punch.

—Lt Col Monroe Kirkpatrick
Asst Fire Support
Coordinator
11th Air Assault
Division Artillery

LITTLE JOHN BATTALION

Like the aerial rocket battalion, the Little John battalion also provides general support, but it is unique in that it can pack the "Sunday punch"—the nuclear warhead.

During maneuvers, the Little John battalion successfully covered the entire division front with its 12 firing sections. On occasion, the battalion penetrated 25 kilometers into enemy territory to fire missions.

Usually the Little John is moved by the CH-47, which can haul an entire section. Like the howitzer sections, they also can be moved by Hueys.

One UH-1D with 48-foot blades and one UH-1B can move a section, which consists of the missile, its launcher, the windset and its allied equipment, and a crew of nine. (Previously, three-Huey loads were employed, one lifting

Little John is flown to predetermined launch site by CH-47

a jeep. The two-Huey load was tried after 1964 maneuvers and proved successful. It is expected that in the future this latter method will be used when Hueys are needed.)

One UH-1D with 48-foot blades has lifted the missile, its launcher, windset, and crew of four. This

Divarty's air transportable "Sunday Punch" — the Little John

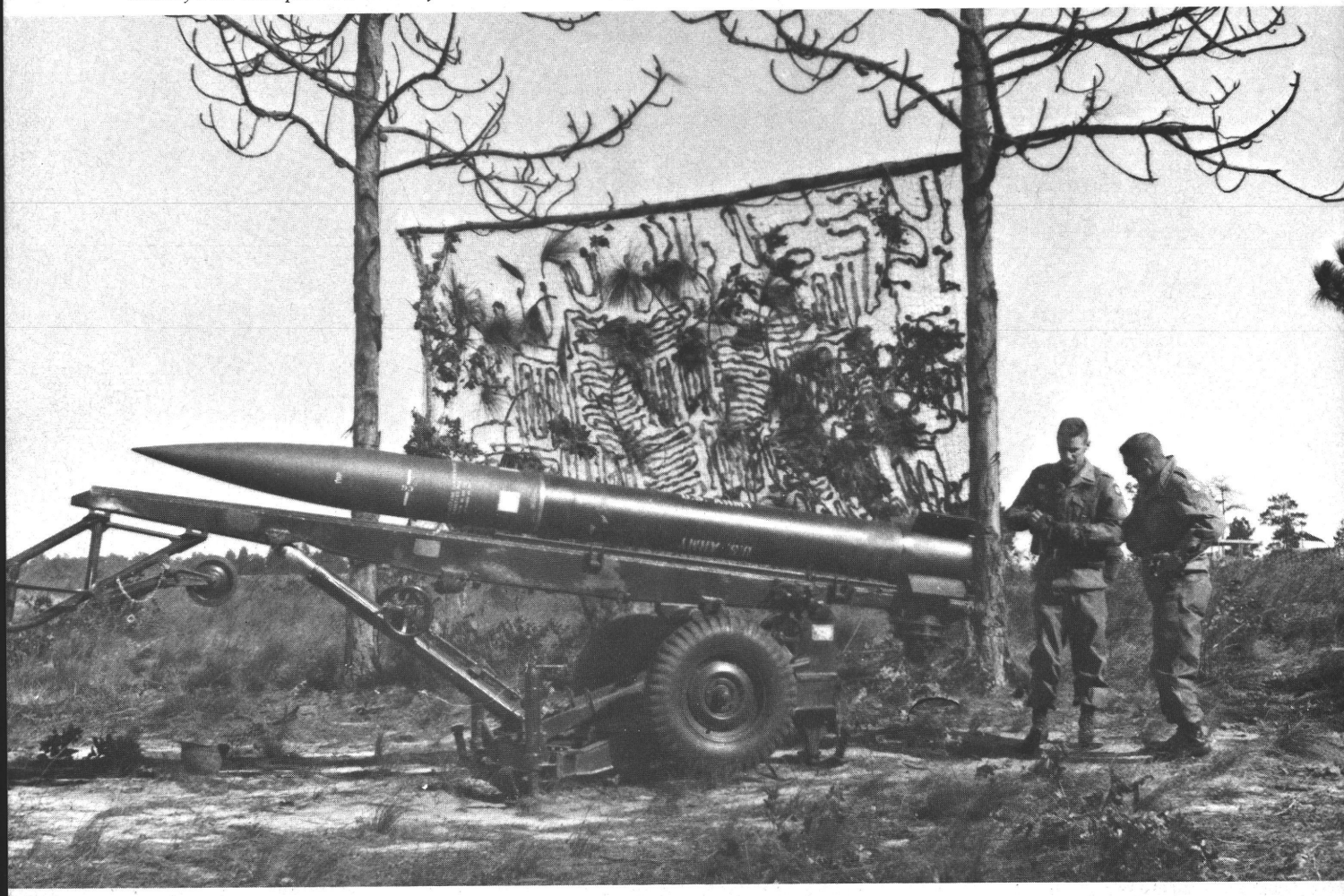

amounted to about 2,500 pounds plus minimum personnel to fire the missile.

In a typical mission, the Little John is flown to a predetermined launch site where it takes the crew about 15 minutes to set up, fire, and get out. Little John is employed when a big punch is needed—i.e., against targets howitzers or aerial rockets cannot handle.

Security is derived primarily from speed and deception. Aircraft transporting the Little John can make a number of stops in the vicinity of the predetermined launch area to confuse the enemy about the missile's exact location. To attack the Little John section, the enemy must detect, locate, and mount an attack—all in 15 minutes. These prerequisites to the enemy attack are offset by the section's ability to "scoot, shoot, and scoot."

WEATHER FACTORS

The agility, diversity and power of the 11th's versatile "fullback" are only slightly hindered by adverse weather. Divarty has proved in maneuvers that it can operate at 200 feet and ½ mile visibility with little loss in capability. It also has proved effective while operating in heavy rain. The only weather conditions that have slowed divarty to date are either extremely heavy fog and/or turbulence, or low visibility at night. Even then, the ground systems can, with ground vehicles, move to get their jobs done where targets are out of range of present positions.

What the future holds for the 11th's divarty with its airmobile Little Johns, howitzers, and rockets is uncertain. But the 11th's divarty has left its mark. A step—a big step—has been taken toward developing a new order of agile artillery support for the infantryman as he seeks to dominate the battlefield.

Battlefield Airmobility

Captain David L. Johnson and Lieutenant James H. Fitzgerald

BECAUSE OF the speed with which an airmobile operation takes place and the great distances which can be spanned by an airmobile force, the problems of providing effective artillery support are immensely compounded.

Exercise Air Assault II demonstrated that wheeled vehicles can no longer tow howitzers to a firing position without departing several hours before any artillery supported attack. Surface movement has several disadvantages: detection is simple; firing positions must be limited to the friendly side of the FEBA; further, terrain will at times preclude use of the best tactical firing position. The most injurious limitation of movement by wheeled vehicles is that the reaction time from briefing to H-hour must include the time essential to move to the firing position—in some cases several hours.

At first view it might well seem that these restrictions can be best

---

Capt Johnson and Lt Fitzgerald are assigned to Company C, 227th Assault Helicopter Battalion, Ft Benning, Ga.

Artillery Concepts

circumvented by parachute delivery. A paradrop would not limit reaction time, nor would it limit the location of firing positions in respect to the FEBA; nevertheless, it does present fresh drawbacks. First, a large drop zone must be close to the desired firing positions or vehicles must be included in the heavy drop. Then we again have the limitations of vehicular movement. Second, derigging the equipment takes valuable time. Third, once the guns are initially dropped we lose the flexibility upon which the airmobile concept hinges. We are limited anew by time, terrain, and distance in any subsequent move.

During Air Assault II the practicability of UH-1Ds (48-foot rotor disc) slinging the M-102 howitzer was examined by Company C, 227th Assault Helicopter Battalion, in conjunction with Battery A, 6th Battalion, 81st Artillery. These experiments in battlefield artillery airmobility were conducted in three phases along the guide lines established below.

INITIAL LIAISON

Upon receipt of warning orders indicating the possibility of movement of M-102 howitzers it is well to dispatch at once a liaison officer to the supported unit. Although time and distance may require

LIAISON OFFICER CHECKLIST

1. Report to the battalion of supported unit for initial briefing.

2. Upon receipt of briefing:

Acquire weather report to include wind direction, wind speed and density altitude.

Ensure that equipment to be lifted is within weight limitations.

Locate pickup and landing zones and arrange for reconnaissance of each.

Make decision, based on above, as to practicability of mission. Inform supported unit commander.

Relay information to company operations for planning.

Remain with battalion until all plans have been made.

3. Report to the battery to be lifted.

Check pickup zone for size and avenues of approach and departure in conjunction with wind direction.

Show gun crews exactly where to position guns for pickup.

If required, tell gun crews what articles must be removed from guns to reduce the lift weight to meet aircraft capabilities.

Brief aircraft guides and hookup men to include:

a. Standard signals.

Stress importance of clear and concise signals.

Ensure that the guides have the load 5 feet above the ground before giving the departure signal.

b. Sling load aircraft hookup and takeoff sequence.

c. Location of aircraft that each guide and hookup man will proceed to, after hookup is accomplished.

Make diagram of pickup zone to include color coding.

4. Return to the lifting unit.

Brief flight leader and aircraft crews including:

Individual aircraft assignment to lifts by color code.

Call sign of each sling load aircraft and lead troop aircraft.

5. Report to battery to be lifted and check the setup of the pickup zone.

Stand by to relay changes to inbound aircraft. If other than original briefing include:

Field elevation
Landing azimuth
Wind direction and wind velocity
Landing formation
Any changes to plan

Be prepared to communicate with aircraft on clear frequency using a headset in the event hookup problems develop.

Ensure the troop ships precede the sling ships into the landing zone.

using helicoptors greatly reduces reaction time for the employment of howitzers, increases artillery flexibility, allows more selective firing positions

him to fly, it is better that he travel by ground vehicle with satisfactory radio equipment, permitting him to remain in continuous contact with his parent unit. He should prepare a checklist for this specific mission (see example).

Immediately upon arrival at the supported unit he should make every effort to determine the minimum essential planning information, e.g., approximate takeoff time, general location of pickup zone and landing zone. With this guidance the supporting unit commander can plan fuel loads based upon travel distance and other missions to be flown.

While initial liaison is but the first step, it must be remembered that continuous liaison is the key to success. It is vitally important that the liaison officer remain with the supported unit throughout the planning to assist and advise. More important he must ensure that plans are thorough and above all logical and safe for UH-1D operation. It cannot be assumed that planners, albeit rated personnel, can properly prepare this mission without flying experience in a lift helicopter company.

MISSION PLANNING

Artillery Battalion

As pointed out, the mission is coplanned by the artillery commander and the lift company liaison officer.

Although not mandatory, it is especially desirable that the pickup and landing zones be reconnoitered by the liaison officer to determine adequacy of size, best takeoff direction, and best layout of the fields for pickup and dropoff. Illustration below typifies the ideal pickup and landing layout.

The principle considerations in planning the placement of howitzers for pickup are: maximum spacing to minimize the effect of rotor wash upon each separate aircraft during hookup and takeoff; crew pickup sites behind the gun lift helicopters to preclude interference.

The good plan designates each howitzer to be lifted by number, letter, or better yet by color. The latter method used during Air Assault II was very satisfactory. Each ground signal man, guiding an approaching helicopter for pickup, wears a colored vest or other suitable garment appropriate to his field piece.

Helicopter Company

Since the primary plans are prepared at the artillery unit, planning at the lift unit is usually limited to routine matters common to any lift mission—radio frequencies, formations to be flown, etc.

The weight of the M-102 howitzer requires that the fuel load be reduced to a maximum of 800 pounds. Based upon the distances between the pickup and landing zones and fuel availability after departure from the landing zone, the fuel load should be reduced to the minimum required to complete the mission with an adequate reserve.

Although the M-102 howitzer weight can be reduced to 3,041 pounds by removing the base plate—it weighs 99 pounds—this should be done only as a last resort. Removal is time consuming, as is replacement in the landing zone, since the base plate must arrive first and the gun then be placed upon it. By removing the muzzle brake, hammer, crowbar

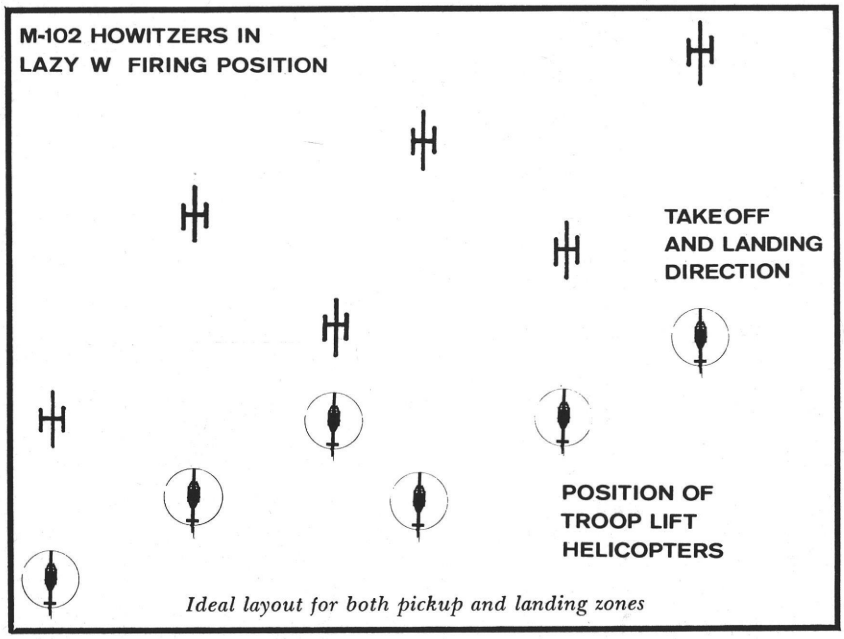

Ideal layout for both pickup and landing zones

and four securing stakes and leaving the base plate attached, weight can be reduced to 3,025 pounds, if necessary.

Gross weight assuming 800 pounds of fuel is:

Basic weight	4,905 pounds
Crew	
(2 aviators)	400 pounds
Fuel	800 pounds
Oil	24 pounds
M-102	3,025 pounds
TOTAL	9,154 pounds

Maximum gross weight of UH-1D (48-foot rotor disc) is 9,500 pounds.

UH-1Ds with 48-foot rotor disc were used to carry complete M-102s in experiments conducted during Air Assault II

PICKUP ZONE PROCEDURE

The liaison officer should arrive in the pickup zone well before hookup time. He will either supervise briefing of the ground signalmen or, better still, personally conduct the briefing. He should ensure that the guns and their crews are stationed as planned and then make radio contact with the lifting aircraft. Use of a headset will assure his hearing all transmissions over the noise of hovering helicopters.

The lead helicopter will make its approach to the first howitzer to be lifted. The remaining howitzer lift helicopters land to reduce rotor wash, unless the pickup zone is large enough to permit each to hover free of turbulence. Each aircraft is directed over its respective weapon as the preceding helicopter departs. Spare aircraft, one each for howitzer lift and crew lift, should be positioned to make their inclusion in the lift, if required, as smooth as possible.

Although simultaneous liftoff and dropoff is desirable, it is not always possible because of pickup and landing zone restrictions.

As the last howitzer is being lifted, the crew lift ships should arrive for the gun crews, including the ground signalmen.

When time or a fluid tactical situation preclude prior landing zone selection, another helicopter—preferably a UH-1B gun ship from the lift battalion—may be used to select the landing zone. Then it joins the lift helicopters en route and leads them inbound.

LANDING ZONE PROCEDURES

Since the sling load aircraft will have to be flown at 60 knots or less while the crew-carrying helicopters travel at least 80 knots, the gun crews and ground signalmen will arrive first. The signalmen should position themselves to direct the sling load aircraft to predetermined sites. Helicopters with slung M-102 howitzers, after maintaining departure sequence, will drop off their loads singly and depart in formation with the crew-carrying aircraft.

Throughout these various stages the liaison officer's role predetermines success or failure. From the initial planning phase to dropoff of the howitzers and crews, he must stay abreast of developments and choose the proper course of action.

During the initial experiments, 30 minutes were required to get four M-102 howitzers on their way to the landing zone—firing position. This time was further increased by the fact that the gun was broken down into two pieces and then had to be reassembled at the landing zone. Single aircraft pickup and takeoff was used adding additional minutes. As techniques were perfected two more guns were added and time spent in the pickup and landing zones was reduced to five minutes in each case. This reduction in time was achieved through improved pilot technique, intact weapon lift, and simultaneous lift by all aircraft.

Through use of the helicopter, the greatly reduced reaction time for the employment of howitzers increases artillery flexibility and allows more selective firing positions in almost any type terrain.

tactics must be designed
enemy's intelligence
his movement weakness

A New Kind Of War

Major Frederick L. Clapp

THE CURRENT opinion of some senior political and military people concerning Vietnam appears to leave the United States with a choice of two possible courses of action in Southeast Asia. Either we get out completely, or we commit additional U. S. troops and fight.

Should the decision be taken to fight, the first logical question is, Fight with what?

The French had 500,000 conventional troops in that area and lost. Unfortunately 11 years later, we have nothing but like conventional forces available for immediate employment.

We have failed to prepare adequately for the "new kind of war" the communists have been fighting and winning since 1945. Consequently, we find ourselves prepared to cinderize an enemy within a

to counter the advantage and exploit

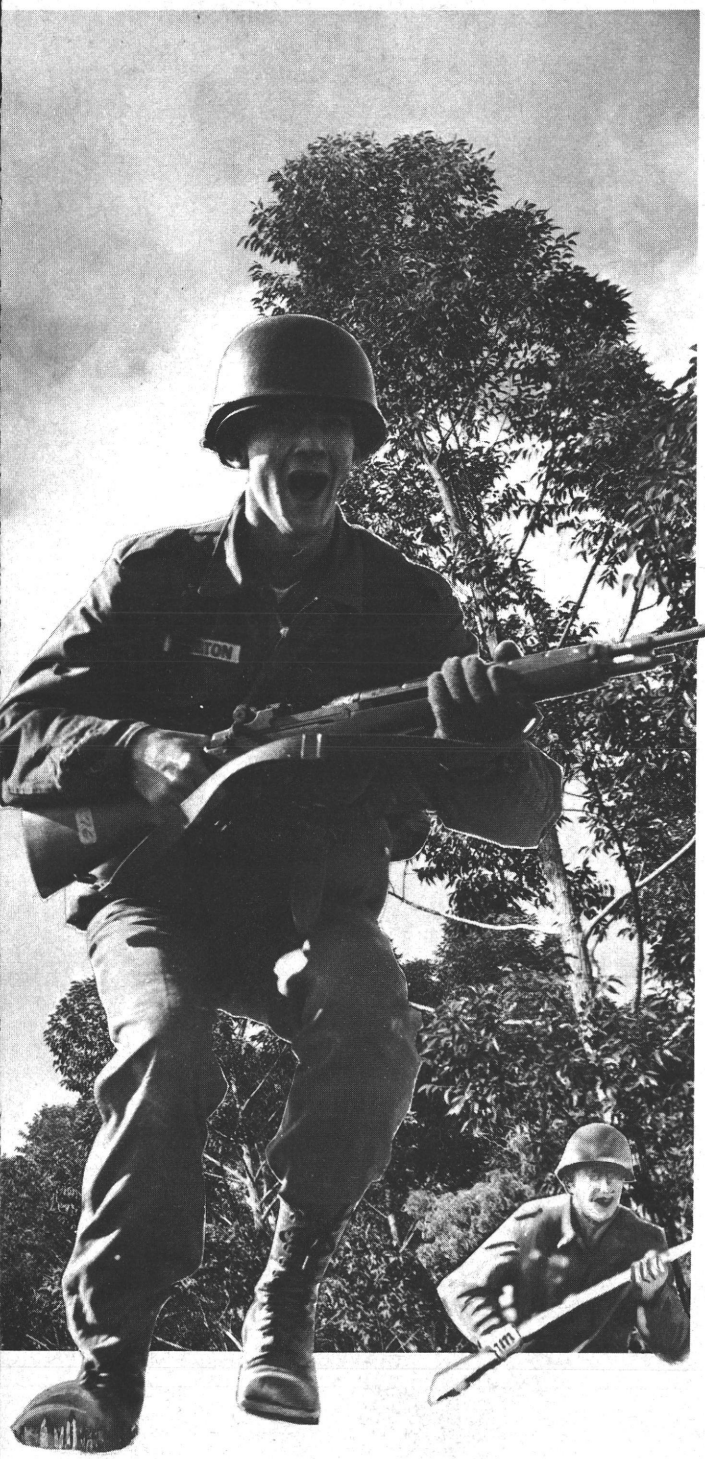

matter of hours, but not for dealing with a few thousand half-equipped irregulars and their communist cadres in underdeveloped areas of the world.

In effect, the "balance of terror" which exists between East and West introduces basic changes to the character of today's battlefield. We call these changes guerrilla war. Regretfully, we have not chosen to tailor enough new organizations and tactics to meet this present and growing threat.

"The long list of unsuccessful operations conducted against guerrilla activities is a product of the inflexibility of many military leaders as well as their intransigent attitude concerning the abandonment of conventional tactics. This military arteriosclerosis has existed down through the ages and is most evident toward the end of each epic period in the style of warfare, symbolized by a major transition of the conventional warfare of the day."*

I do not suggest that conventional infantry and armor organizations are not needed, or that conventional ground tactics are obsolete. What I do suggest is that both conventional units and tactics are inadequate against guerrilla forces.

Past military policy of most nations has been the employment of large conventional armies to destroy a guerrilla enemy. There are two major problems to this solution. One, it's enormously expensive; two, it doesn't work, i.e., China, Indochina, Algeria, Cuba.

I think the position of a conventional force fighting a guerrilla can best be compared to the unhappy position of a man trying to swat a bumblebee with a sledge hammer. As the man swings the hammer he expends a tremendously disproportionate amount of energy in relation to that expended by the bee. If, in the unlikelihood, the man should hit the bee, the result is a giant overkill resulting in an insignificant and easily replaced loss. Meanwhile if the bee

* Joseph P. Kutger, *Irregular Warfare In Transition*

The views and opinions expressed herein are the writer's and are not to be considered as an official expression of the Department of Defense.

New Kind of War

stings the man often enough, the result is fatal. Shades of Indochina.

Accepting the fact that present military methods have sometimes proved ineffective against guerrilla forces, we must attempt to determine why, and make those tactical and organizational changes necessary to correct this situation.

A review of guerrilla methods of operation reveals the enemy's most significant advantage is his superior combat intelligence. Conventional military units cannot help but provide considerable combat intelligence to a guerrilla enemy. Basically, this dilemma allows the enemy to attack at the most opportune times and places for him. As a result, our actions become reactions to those of the enemy, and our tactics become defensive by nature.

Our practice of garrisoning, coupled with the intelligence advantage enjoyed by the guerrilla, affords the enemy ample opportunity to move with impunity outside of those limited areas which we occupy. In essence, a very large army can only physically occupy a relatively small actual area. Consequently, the guerrilla, by always knowing the locations of our forces, wins by default all the area outside of that physically under the guns of our troops.

Further study of the guerrilla indicates his greatest weakness is his essential need for freedom of movement. The guerrilla's seemingly promiscuous, unpredictable and illogical method of fighting leads us to overlook the fact that, like ourselves, the guerrilla is governed by the same principles of war as enunciated by von Clausewitz. In addition, the guerrilla must concern himself with community security, community support, propaganda, enemy proximity, part and full-time functions, organization, etc. To satisfy these numerous requisites, the guerrilla must be free to move extensively.

Any organization, or tactics, which we might develop to effectively deal with the guerrilla threat must be designed to counter the enemy's intelligence advantage and exploit his movement weakness. A chess player knows that when confronted with a threat that cannot be parried, the best course of action is to subject his opponent to a like threat.

Maj Clapp is with the Contract Instrument Division, Dept of Rotary Wing Tng, Ft Rucker, Ala.

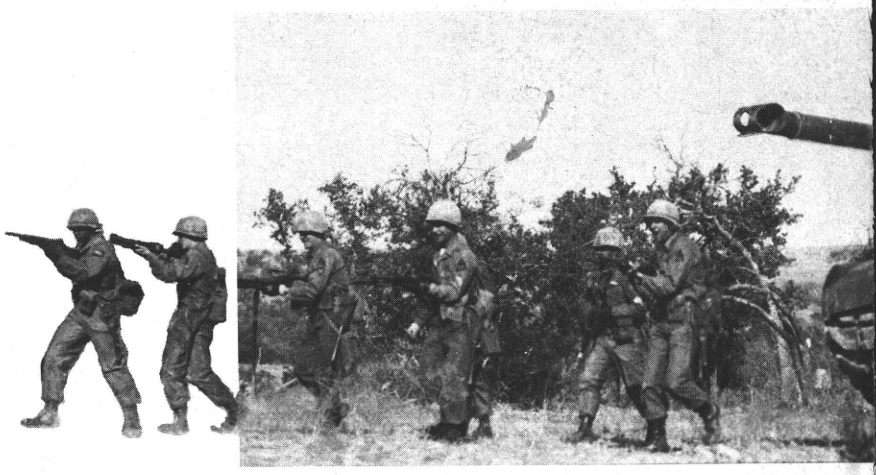

Conventional units and tactics are inadequate against guerrilla forces

Thus any advantage is neutralized. If we apply the same principle to guerrilla war we can see that our organization must be highly mobile. It must be large enough to protect itself, but small enough to deceive the enemy as to its location. In such a deception our organization would successfully neutralize the enemy's intelligence advantage and stand a fair chance of capitalizing on his movement weakness. I will later describe in more detail how such objectives might be realized.

A basic organization which could meet these objectives would consist of 59 officers and men. I choose to call this organization an Infantry Aviation Destroyer Troop. It is divided into a destroyer ele-

In developing destroyer tactics we must exploit our advantage of mobil

ment and a support element. The destroyer element consists of 44 officers and men and is equipped with five UH-1 helicopters, two of which are armed.

Obviously the helicopter is the only available means of providing the high degree of mobility essential to the success of a destroyer troop. All troop tactics are designed around the helicopter. Therefore, to a destroyer troop, the helicopter is as much a combat vehicle as a tank is to an armor unit. Consequently, helicopters must be TOE to destroyer troops, just as tanks are TOE to armor units.

The success of a destroyer troop would depend in great part on the troop's ability to react or move quickly. If this capability is to be realized, troop leaders must thoroughly understand not only the capabilities and limitations of the infantry soldier but also the capabilities and limitations of the helicopter which make the exercise possible. With the exception of five maintenance men, all enlisted personnel in the destroyer element of a troop are regular infantry soldiers. Troop officers are both infantrymen and aviators. While in the air, the officers are pilots. Upon landing they turn the aircraft over to their WO copilots and lead the ground troops in whatever operation is at hand.

We now turn our attention to logistics. Owing to difficult terrain and relative lack of roads, railroads and airfields in the underdeveloped areas of the world, overland supply methods are out of the question. If a destroyer troop is to have the sustaining capability and great mobility essential to its success, all resupply must be by air. For this purpose I have included a support element as an integral part of a destroyer troop. The support element consists of 15 officers and men and is equipped with two CH-37 or CH-47 helicopters. One machine is equipped to handle POL only. The second ship would carry all other needed supplies.

The support element leader would be directly answerable to the destroyer troop commander. The troop commander would always be with the destroyer element of the troop. A typical resupply operation would have the support element rendezvous at a time and place directed by the troop commander. The destroyer element would reach the rendezvous first to secure the area. Upon arriving, the support element would effect the necessary resupply. However, coordination would be such that neither element would remain in the resupply area more than one hour.

As can be readily seen, the support element must operate from a secure logistical base. The ideal supply base would be a small aircraft carrier located off shore from the area of operation. A carrier is equipped with maintenance shops, could carry float aircraft, and would stock necessary levels of POL and other classes of supplies. **If the logistical base is located on land, it would have to be at an air base, and security would be more difficult.** When operating from a land base, Air Force cargo ships would wholesale supplies into the base and the troop support element would retail supplies to the troop in the field.

ity and firepower

Maintenance is always a matter of concern when talking about helicopters. I visualize organizational maintenance being accomplished by rotating, one at a time, ships in the field with float machines at the supply base. Higher echelon maintenance would

To avoid deep involvement with an enemy force of superior strength, a troop commander would spend a major part of his time planning how he intends to run, rather than fight. Prolonged fire fights would be avoided.

be performed by supporting maintenance teams. However, it would be the troop commander's responsibility to evacuate disabled ships to the supply base area for repair. This would be done by directing the support element leader to bring forward a replacement ship and air evacuate the disabled machine with one of his cargo helicopters.

For evident reasons reliable communications are essential to the destroyer concept. The troop destroyer element would be equipped with considerable tactical radio equipment. Each helicopter would have total FM and UHF coverage. **In addition, two of the helicopters would be equipped with HF single side band radios for long range communication.**

In developing destroyer tactics we must exploit those major areas in which we enjoy an advantage over the enemy. The two most significant areas are mobility and airpower. From these we derive a number of additional advantages.

Techniques have been developed that enable us to land and reload personnel from a helicopter, even though the helicopter cannot land due to dense vegetation or other ground obstacles. (See DIGEST, "Up and Out," Sep 63 and "Heliport Construction in Latin America," Jul 63.) Using these techniques, a destroyer troop is capable of conducting an "itinerant" type occupation of a very large area. Because of its mobility, a single troop can reasonably be assigned an area as large as 2,500 square kilometers. In such an event we would enjoy a degree of economy of force heretofore undreamed of. Even in an area as large as 50 by 50 kilometers, a troop would never be more than 30 minutes from any point within its assigned area. Over a period of 10 to 15 hours a troop could land and temporarily occupy multiple locations throughout such an area.

Unquestionably, the majority of troop landings and departures would be seen and reported to the enemy by local natives. Such reports should tax the enemy's communication system and alarm his intelligence people. For example, the enemy might receive word that five helicopters landed at point A at 1100 hours and departed the same area at 1300 hours. From such a report he would have no way of knowing if all troops departed with the helicopters or if the area were still occupied.

A series of such landings over a wide area would raise in the mind of the guerrilla at least the possibility of enemy forces at heretofore safe locations. This should cause the enemy, like ourselves, to conduct much of his ground movement in constant anticipation of possible ambush.

Normally, the helicopters would remain immediately with the troop while on the ground. When personnel are intentionally left in an area, or the helicopter cannot land due to terrain, primary and alternate pickup areas would be designated beforehand. Except after dark helicopter ground time in any one location would be limited to less than 3

If logistical base for destroyer unit was landbased, Air Force Hercules delivery of supplies into the base

New Kind of War

hours. At night the time might be extended to as much as 6 hours.

Upon occupying a given location, a troop would establish a perimeter defense. Using claymore mines, kill zones would be set up along trails, roads, canals or other likely avenues of enemy movement. If there were nationals in the vicinity they would be questioned for intelligence information. If the occupied area were near a road or canal, wagons or boats could be stopped and checked for contraband. When enemy forces are encountered, a troop commander would follow one of several possible courses of action.

It is unlikely that a troop would be surprised on the ground by an enemy force. In addition to listening posts about their perimeter, a troop would be equipped with sentry radar. According to a recent publication, a company has developed a sentry radar that weighs only 8 pounds. Such a device should be perfect for destroyer troop purposes. For night operation infrared equipment would be available.

would make wholesale

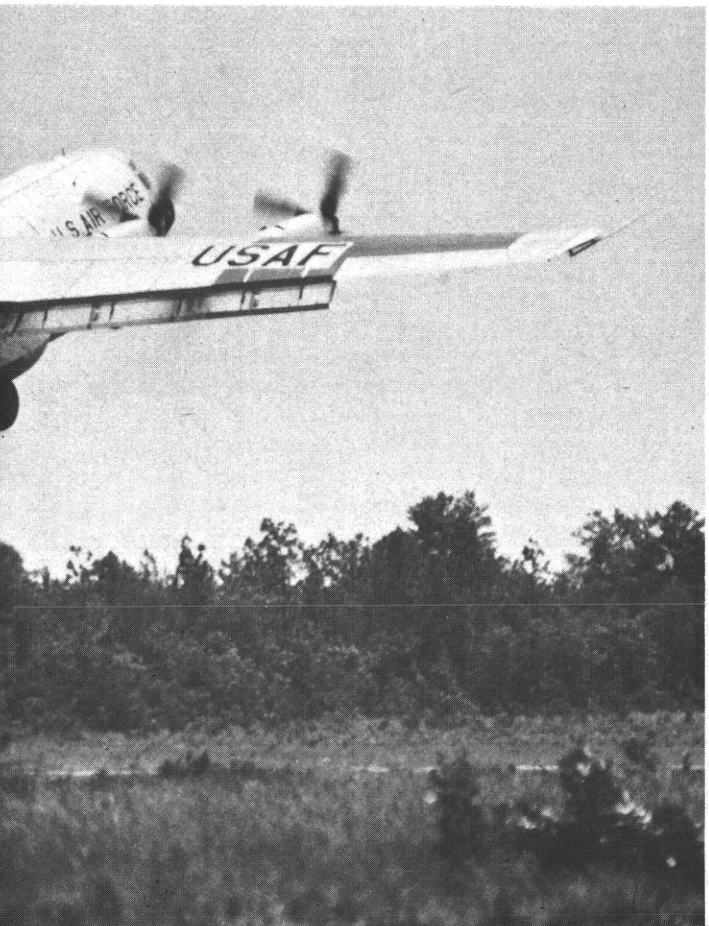

The size of a detected enemy force would have the greatest bearing on what action the troop commander might take. If the enemy force is small, he would attempt to destroy it. **If, however, the enemy force is of company or battalion strength, he will run.** A destroyer troop is not equipped for sustained fire fights. Fifty percent of an infantryman's firepower is artillery. Since a destroyer troop would have no available artillery, supporting fire must come from some other source. This brings into play our second major advantage, airpower.

Using HF radio, Air Force or Navy tactical air could be called in on the target. Smoke, marker dye and radio would be used to direct air strikes. Proper coordination with tactical air should reduce time lag between request and strike to an hour or less.

To avoid deep involvement with an enemy force of superior strength, a troop commander would spend a major part of his time planning how he intends to run, rather than fight. This is a considerable departure from normal infantry tactics.

According to C&GS doctrine, "The most effective means of destroying a hostile guerrilla force is to conduct a continuous aggressive offense." A destroyer troop could accomplish this end, but not by engaging in prolonged fire fights. Tactics dictate that a troop's limited strength and firepower be employed only to the extent necessary to effect disengagement and gain necessary time to bring the superior firepower of tactical air into play. To do otherwise would allow the enemy free use of his superior ground power and would sacrifice the

Disabled aircraft would be sent to supply base area for repairs

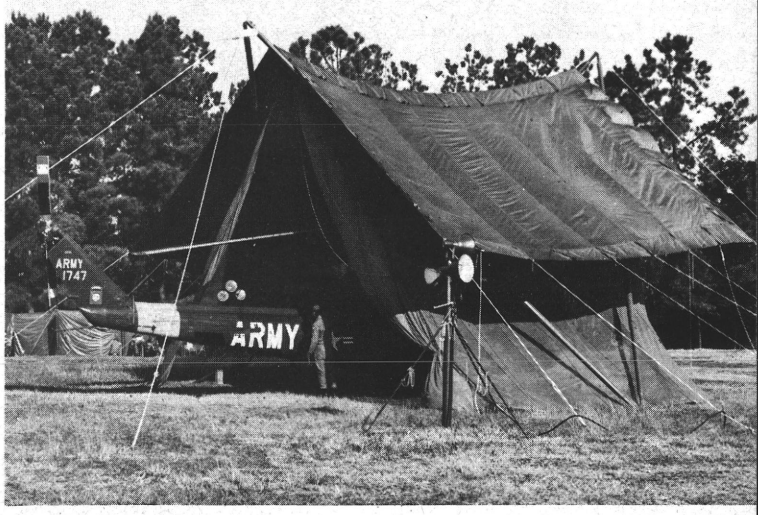

New Kind of War

Techniques and training have enabled units to embark or disembark from hovering helicopters

troop's mobility and airpower advantages. For the same reason a single troop would not be expected, nor should it attempt to "take" or "hold" anything.

Beyond the few principles mentioned, there are no basic rules applicable to destroyer tactics. The versatility of the helicopter makes possible an almost unlimited number of tactical combinations. Each engagement will vary in some degree from previous engagements. How and to what extent will depend on the situation and the terrain.

It is possible, but not probable, that a troop might be deceived into landing in the middle of an enemy force. If this should happen, we are going to have casualties. In such a case, however, we would not expect to lose the entire troop. Only the personnel in one helicopter, supported by two armed ships, would be landed until a recon of the area was completed.

I have limited my discussion to a description of a single destroyer troop. This is because the troop represents the smallest unit capable of sustained independent action. Obviously, realization of the full potential of the destroyer concept will require the formation of larger organizations, such as squadrons and groups.

A squadron would be comprised of five troops. Each troop would be capable of independent or concerted actions. For the first time *immediate* concentration and dispersal of a tactical force, over a wide area, would become a reality. The tactical combinations open to a squadron greatly exceed those of a single troop.

Here care must be exercised to avoid conventional thinking in terms of preparatory fires and assault lines. In a guerrilla war the "minuet" as described by Mao Tse-tung is much the better squadron tactic.

A group would consist of three squadrons plus auxiliary rocket and machinegun fire support troops. Once again the area of influence and tactical possibilities are greatly multiplied.

Due to the terrain in the underdeveloped areas of the world, a single destroyer group could more adversely affect guerrilla forces than could thousands of conventional soldiers in an area of equal size.

I don't know if the destroyer concept will work, and neither does anyone else. The only way to find out is to try it. This should be done at troop level. Any attempt at a higher level would cost too much money and would be confusing due to the larger numbers involved. A single troop would cost nothing and would involve only 59 people. We already have the necessary equipment, and the personnel would require no additional special schooling.

If personnel are intentionally left in an area, or terrain prevents landing, primary and secondary pickup areas are designated beforehand

Six weeks would be ample time for unit training. The personnel are already trained infantrymen, and their only requirement would be to learn the technique of using the helicopter in the conduct of an infantryman's job.

After six weeks' training, the troop could be sent to Vietnam. Within 90 days we would either have a proved concept, or we would know something else that doesn't work. In the former event development of squadron and group size units would be relatively simple.

For years we have talked about a nuclear battlefield consisting of undefined, fluid fronts and vast areas of no man's land. Theoretically, this battlefield is occupied by small, highly mobile, hard-hitting forces capable of independent or concerted action. If we take away the nuclear weapons, the guerrilla area of today closely resembles the nuclear battlefield of tomorrow. Regretfully, we have yet to develop the small, highly mobile, hard-hitting force recognized as essential to success on such a battlefield.

Many capabilities of Army Aviation have advantageously been molded to the support of conventional organizations and tactics. However, owing to the necessary size and relative immobility of conventional forces, much of our Army air potential remains undeveloped.

Unlike present doctrine, the destroyer concept consists of independent troops divorced of any connections with a parent conventional unit.

Today the Army is confronted with a pressing need for organizations and tactics that will, in the eyes of the enemy, render guerrilla wars as equally unpromising as thermonuclear or conventional war. In my opinion a merging of infantry and aviation capabilities can quickly and economically satisfy this purpose.

Frankly, I don't think we have too much time. Even if present methods were successful, the United States cannot afford to train and equip a modern Army for all the potential Vietnams in the Free World.

The Middle East, Africa, and Latin America are already in ferment. From the Communist point of view they offer excellent settings for future "Wars of Liberation."

General MacArthur said, "There is no substitute for victory." Let's hope we must never settle for less.

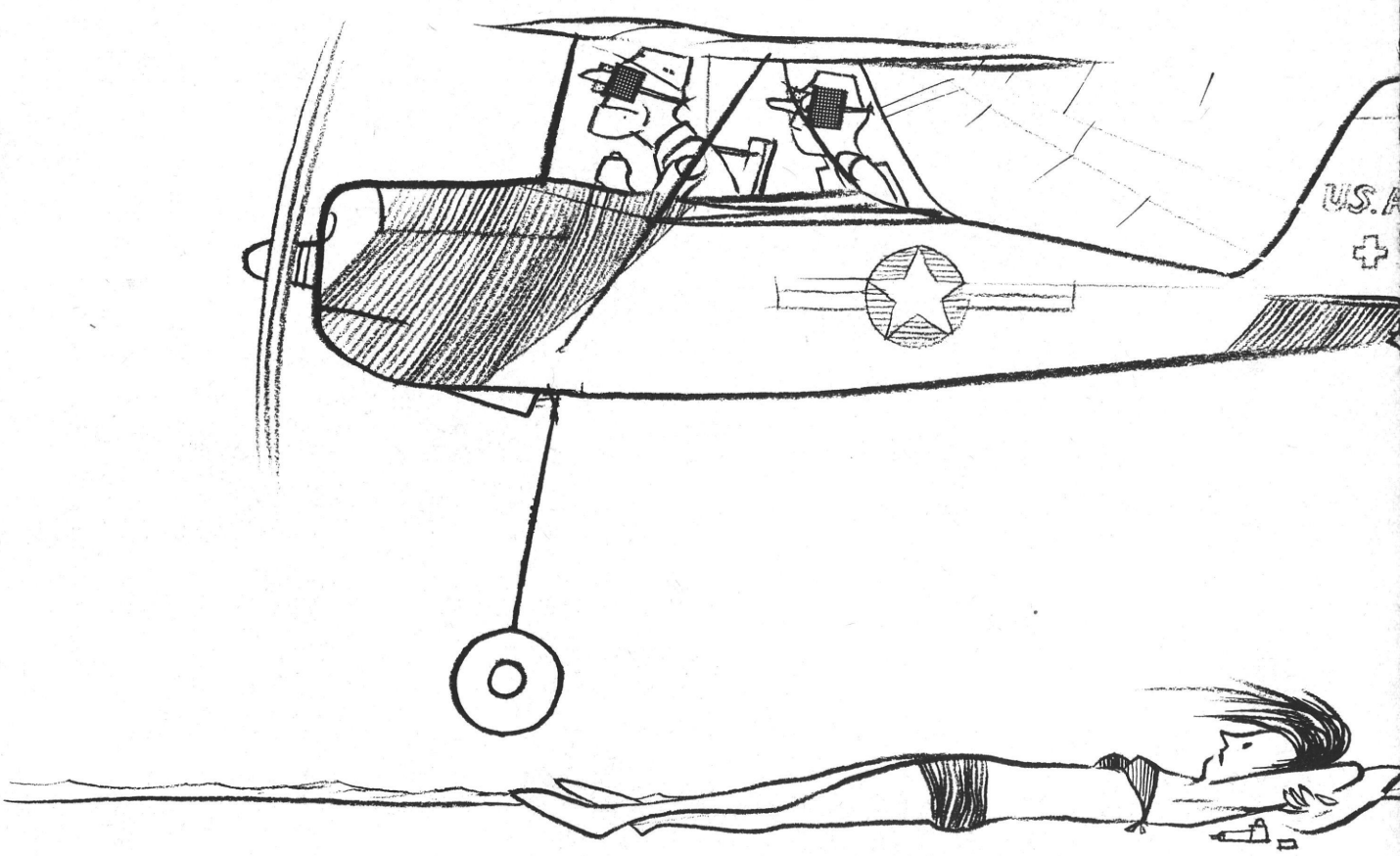

Set the Right Example

Major Jack J. Nelson

HOW MANY TIMES have you, as an Army Aviator or crewchief, or for that matter as a father or older brother, been in a position to set an example for others? Just a couple of moments thought will, undoubtedly, bring to mind several instances that have taken place over the recent past. A bit more memory rustling will probably bring to mind other instances where your impression on others led to their later acting in ways that would be far from acceptable to you.

Let's take a few for instances.

Recall the time when you required all of your section to be at a specified location at a definite time and then—you showed up late? (Probably with good reason —or was it really?)

How about the time you had the young lieutenant on his first IFR copilot mission and you were a bit slipshod in your preflight planning because you'd made this particular flight so many times before?

Remember the day you held forth on inflight hazards during a hangar flying session and cautioned all within earshot about how useless was the sky above you? Then the crewchief with you a few days later witnessed you go out and pull a bit of derring-do—outside of an approved contour flying area. You can bet he spread the word.

Can you think of times you've talked, lectured and, by example, operated an aircraft so that you

all for most of us to relive some of the foregoing. Fortunately most of us have developed a habit of consideration for others, and instances wherein we commit or omit actions that set a guide for others to go astray, because they look up to us, are infrequent.

The greater one's flying experience and rank, the more far-reaching are the examples set. This is true whether the example is good or bad and whether there is one witness or many. Unfortunately the human temperament is such that poor examples seem to receive more publicity, and as a result, are followed more than are the good. A Chinese proverb says that one picture is worth more than ten thousand words. (Confucius said it and psychiatrists have proved it.) So of all the ten thousand word speeches, essays and admonitions, each can, at a given time, be completely blanked out for some by one thoughtless example.

Knowledge of one's capabilities and limitations in all aspects is most desirable in a military leader and, even more so, if that leader is involved with aircraft.

How about taking a few moments every now and then and recalling your activities when in or around aircraft? Think of some people who may have been aware of you and your actions. See if you can't recall subsequent actions they may have taken as a result of what they observed you doing. You'll probably recall more good examples than bad—but why have to recall any bad ones?

More awareness of the effect any personal example may trigger should be an unconscious part of everyday living. I'm not trying to say think long, hard and wide before doing everything, but I am saying that knowing what one should do and performing it in the manner in which it should be done will, invariably, set a good example and one you can be proud of if others emulate it.

Preflights, techniques, procedures, dress, language and other acts are, for the most part, habit. If the habits are good, it follows that acts, and examples resulting therefrom, will be good.

Take about 120 seconds and see if *your examples* always measured up to *your standards.*

Disciplined man

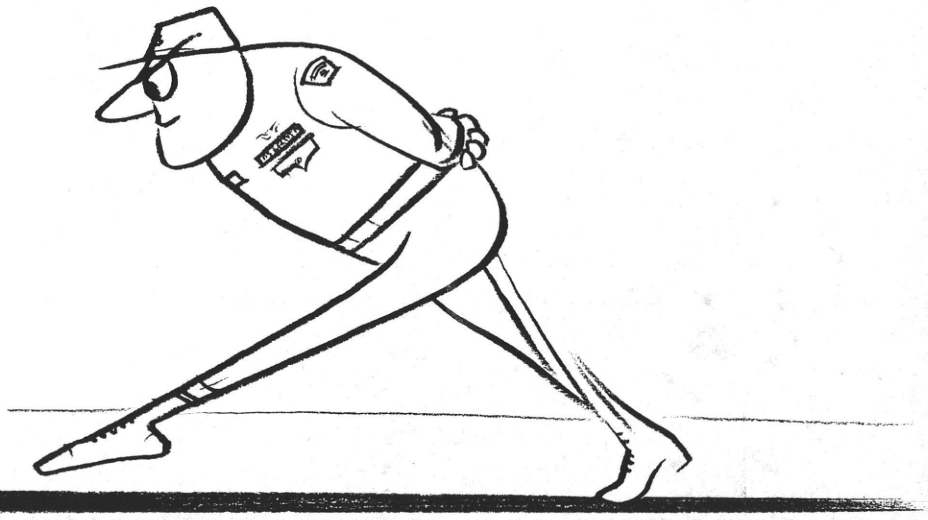

did *not* fly over livestock, dust off the Sunday Gallery at the ramp, hover too close to a pitched tent, maintain a route that was too bumpy for a passenger you knew was queasy in flight, asked the VIP passenger if he'd mind a few extra steps to avoid hovering too close to his reception party?

It shouldn't be very difficult at

Maj Nelson is with TEC group (Project TEAM), Ft Benning, Ga.

Crash and Carry

WE HAD CLEARED our wheels when she sputtered and went down," related an Army Aviator in the Republic of Vietnam. "It's a weird feeling," he added, "to be flying along smoothly, then suddenly find yourself heading nose-down into a rice paddy."

Shortly after clearing the runway the U-1A Otter had gone into a nosedive and headed for the marshy ground, the victim of a cracked cylinder block. A professional bit of flying brought the plane under control long enough to make a safe landing. Now a new problem had arisen: how to get the Otter from its resting place and prevent it from falling into the destructive hands of the enemy.

In the Republic of Vietnam emergency crash and carry service for damaged aircraft is provided by three Mojave "Tow Companies," using the rugged, versatile CH-37 Mojave as a tow wrecker. These Army Aviation units make daily flights throughout the 700-mile long republic.

Operating almost continually in hostile territory, the crews have rescued nearly every type of aircraft engaged in helping the Vietnamese thwart the Viet Cong. Missions into the lush, matted jungles or into rugged mountainous terrain mean one thing for the recovery crews: doing their job promptly and getting away from possible VC attacks. Time is their watchword and their guide.

Once at the site of a downed aircraft the crews follow a prescribed plan for recovery. Sentries keep a sharp eye on the surrounding countryside for Viet Cong. The crews realize their vulnerability and know that each extra minute on the ground increases the possibility of an attack.

Left: Rice paddy emergency landing area gives up Otter as Mojave lifts it for return trip to repair base

Mojave lowers Otter to ground at aircraft repair facility where it will be "fixed to fly" again

Right: Huey B is guided into LZ during aircraft recovery operation. Excess parts stripped from the A-1E Skyraider will be loaded aboard the Huey to lighten load for CH-37.

Below: Mojave pilot receives directions to hoist Skyraider for return to base area

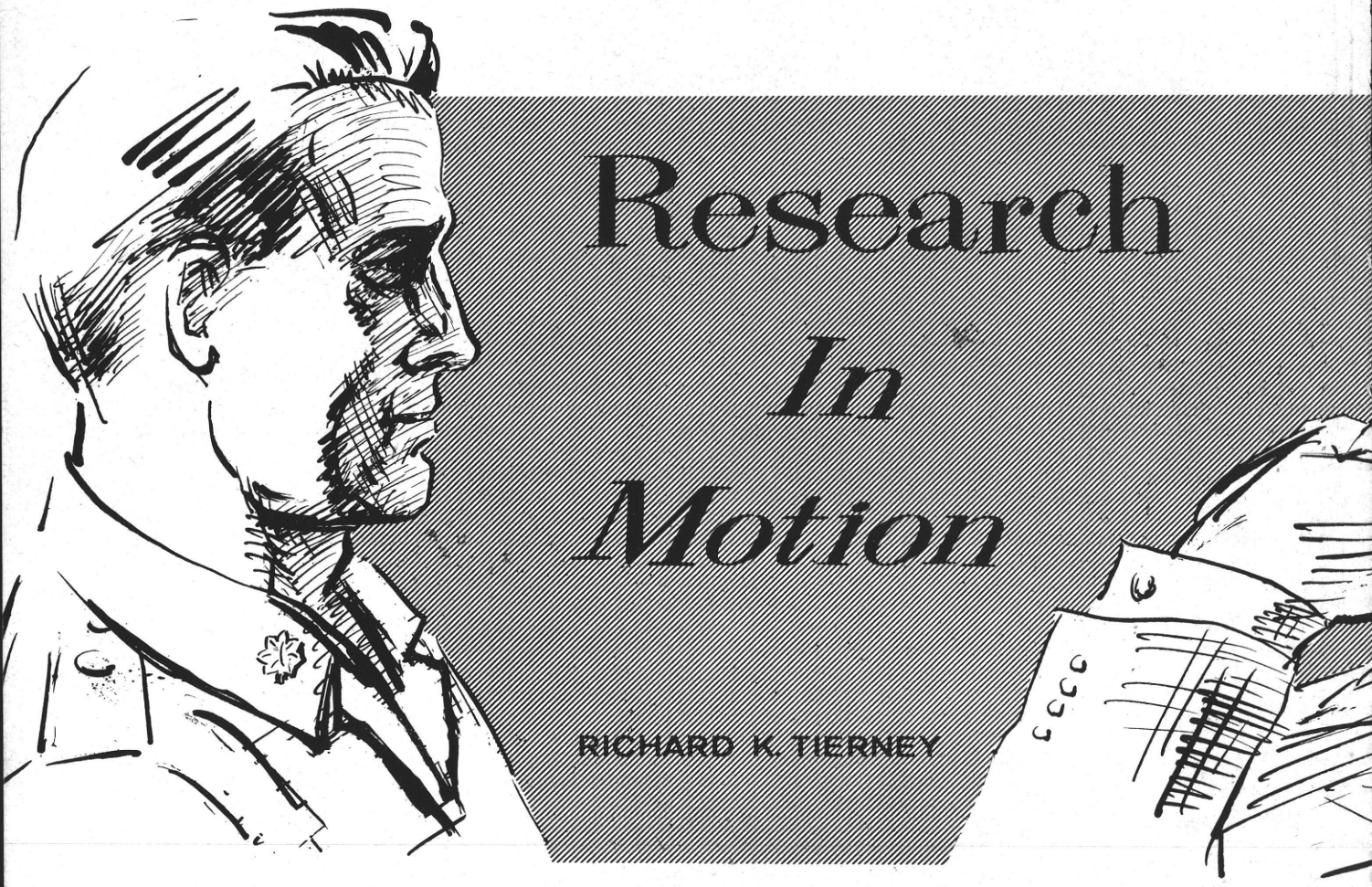

Research In Motion

RICHARD K. TIERNEY

BEFORE LONG Army Aviators may receive "air conditioned" flight helmets. Development of a cooler helmet is part of an intensive program at Natick Laboratories aimed at improving the soldier's equipment and comfort—and thus his combat effectiveness.

An Army Materiel Command field agency at Natick, Mass., the labs have extensive facilities for research, design, development, improvement, and conduct of engineering tests on equipment and supplies. In addition to the helmet, projects of vital interest to Army Aviation personnel include development of armor protection, clothing, POL handling equipment, shelters, survival gear, and parachutes.

A cooler flight helmet is one item Army Aviation personnel certainly would welcome. Unfortunately, such a helmet will not be available "next week." However, NLABS engineers are researching three approaches that may lead to the development of a "cool" helmet:

- Ventilating the helmet by scooping up ambient air outside the aircraft and letting it flow through the helmet and out through perforations.
- Controlling the rate of evaporation by directing a stream of dry air through the perforated helmet. A problem was encountered using high airflows, which produce an undesirable whining sound as air is forced through the helmet.
- Providing thermoelectric cooling surfaces within the helmet. These could be operated by batteries or the aircraft's electrical system. Weight and cost problems have been encountered.

Cooling the helmet is part of an overall NLABS research program on human environmental protection. Natick personnel are researching and acquiring new knowledge about fabric characteristics, the heat produced by man, and heat factors in cockpits. This information will be used to develop clothing and equipment items to allow more comfortable skin temperatures in both temperature extremes.

The Army has moved along rapidly developing a new nylon helmet that offers greater ballistic protection for the head (see DIGEST, May 1965). The helmet was expected to be submitted for type classification about 1 July.

But the new helmet is still not completely satisfactory. Since the standard visor shatters easily, an unbreakable, shatter-proof visor, made of polycarbonate, is being developed and should be ready for production by the first of the year. The new visor withstands blows from heel or hammer without shattering and offers much greater resistance to flying projectiles.

Initially, production problems had to be overcome to turn out a visor optically acceptable to Army medical authorities. These problems now appear to have been solved and other branches of the armed services and NASA are interested in this development. Financially, the new visor represents a considerable saving since it is expected to cost about $1.00 as compared to $4.00 for the old one.

PERSONNEL ARMOR

Protecting Army Aviation personnel against small arms fire has become a matter of increasing concern. While NLABS has been seeking personnel armor protection that can be used as universally as possible, it has now directed special efforts toward armor protection for aircrewmen in the Republic of Vietnam.

NLABS personnel are developing individual body armor to protect Huey pilots, crewchiefs and gunners (fig. 1) against .30 caliber armor piercing rounds at 100 yards.

The chest and back are protected by a vest, with the armor staggered in two layers to offset the seams. The vest has a quick release device for fast removal. Arms and legs are protected by articulating armor that can be strapped onto the limbs. All together, this armor weighs 80 pounds. A technologist of NLABS recently visited Vietnam to evaluate the armor concepts.

Several modifications of the torso shield and other body armor are being tried in efforts to lighten it and make it more flexible. The end products are expected to be issued as items of personal equipment and should be available on a limited basis in about one year.

PARACHUTES

The Airdrop Engineering Division at the labs is working on an underarm life preserver to be attached to the emergency chest or back style parachute harnesses. Currently, vest type life preservers are used with separate harnesses that must be worn under the parachute harness.

The new preserver (LPU-31P) weighs about 6 ounces and zips onto the parachute harness (fig. 2-3).

NLABS also has come up with a hard-shell container for the 5-foot and the 22-inch drogues on the Martin-Baker seat parachute. The container fits in the head box of the ejection seat (fig. 4) and enables maintenance personnel to remove the drogues in the container.

Currently, it is necessary to repack the drogues every 90 days at or near the aircraft by removing the plexiglass hood or by going through the time consuming process of taking the entire seat out.

When repacking in or near the aircraft, the drogues are subjected to damage from oil, dirt, and sharp edges. Also, they are often repacked by personnel not fully qualified to perform maintenance on them.

The drogue containers make it possible to set up a time-saving exchange system which will enable immediate replacement with repacked drogue containers. The drogue container needing repacking is easily removed and carried to a suitable area where qualified packers are located.

An engineering change proposal (ECP) is now being processed, and Martin-Baker seats equipped with drogue containers should be available this month.

SURVIVAL KITS

One of the most personal forms of personnel protection—survival kits—is developed at NLABS. Standard Army Aviation survival kits (Hot Climate, Cold Climate, and Overwater) were type classified in November 1962. The Mohawk Hot Weather and Overwater kits were type classified in January 1965 while the Cold Weather and SEEK I kits (see DIGEST, Aug 1964) are expected to be type classified soon.

NLABS, in conjunction with other Army agencies, is studying the possibility of making a limited warfare personal kit available for Army-wide use. If adopted, it will replace the currently available

Research in Motion

Figure 1. Proposed armament for door gunners, crewchiefs, and pilots of UH-1s. Wheels on leg piece do not turn, but facilitate movement. Protection for arms not shown

PSK-2 kit and the SEEK I.

NLABS clothing research for Army Aviation personnel will be limited until approval of a small development requirement (SDR) for a clothing system for Army Aviation crew members. The SDR now is at Combat Developments Command headquarters, Fort Belvoir, Va. It originated at the U. S. Army Combat Developments Command Aviation Agency, Fort Rucker, Ala., from a study that recommended both additional items of clothing and replacements for those considered unsatisfactory.

To meet an interim requirement for a fire-resistant flight coverall, the Navy has offered their khaki coveralls (fig. 5) for Army use. NLABS and the Combat Developments Command have determined these coveralls adequate to meet the interim requirement for Army Aviation and will begin actions to get them type classified for Army use.

A similar situation exists for gloves. Until the clothing SDR results in an Army flying glove, Army Aviation personnel can order an Air Force glove (FSN 8415-268-8305) through normal supply channels.

A need also exists for lightweight, cold weather boots that will allow the Army Aviator the "feel" of foot controls. NLABS researchers are evaluating various materials and insulations in hope of coming up with a cold weather boot that will serve *all* the Army's needs.

To facilitate the Army's efforts to research and develop the special clothing and equipment needed by Army Aviators, NLABS has completed an anthropometric survey of Army Aviators. After a 10 percent sampling taken at random, it was found that the average Army Aviators are older, taller, and heavier than average Air Force or Army personnel (fig. 6).

POL

Natick Laboratories is responsible for research and development of POL equipment and systems for packaging, transferring and dispensing of POL for the field army.

In search of much lighter weight equipment to facilitate handling, improve mobility, and increase efficiency of operation, containers made of ultra lightweight films have been under investigation. One such film is known as Tedlar —a rugged material extremely resistant to most corrosive materials, including petroleum products.

Using Tedlar of 4 mil thickness, a 3,000 gallon static container weighing 35 pounds empty (including metal hardware) was developed (fig. 7). Also, a 2 mil thick 1,000-gallon Tedlar container weighing 15 pounds was

Figure 2. New underarm life preserver zips onto parachute harness
Figure 3. Inflated underarm preserver

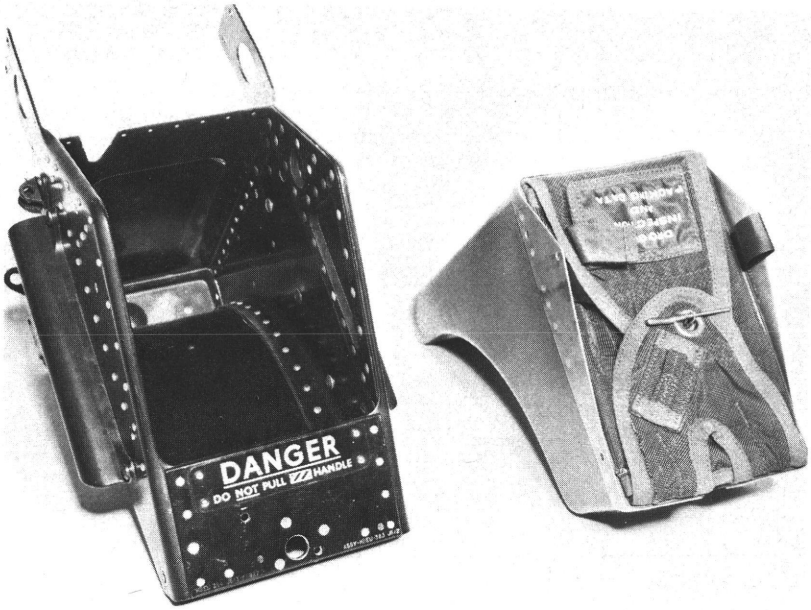

Figure 4. Removable containers for Martin-Baker seat parachute drogues

commercially produced. When full the container withstood the stress of a 200-pound man walking on it. It is conceivable that this exploratory development work will lead to a large pillow container which can be delivered to forward areas in a suitcase.

Lightweight polyurethane coated nylon also is being explored for self-supporting bulk fuel pillow container applications. Containers using this material will be much lighter than the currently standard rubber constructions, but probably about twice the weight of the film containers.

AIRMOBILE REFUELING SYSTEM

In 1962, Army Tactical Mobility Requirements Board (Howze Board) studies evaluated the concept of converting Army aircraft into airmobile filling stations. The improvised equipment used to prove concept feasibility was too heavy and of inadequate capacity. However an improved interim airmobile refueling system consisting of a dispensing unit and two 500-gallon rubber drums was purchased for use in Vietnam. Ten were sent to Vietnam in March 1963 and five more were delivered in September 1963.

Because of the severe weight limitations in aircraft operations, a qualitative materiel requirement approved in October 1964 specifies a 100 gpm system which will have 5 percent equipment weight and 95 percent fuel weight to make up 100 percent of rated aircraft load. In response to this requirement, a new and far reaching design has been produced and the prototype is being assembled

Figure 5. Navy khaki coveralls proposed for Army use

Figure 6. Anthropometric survey of Army Aviators

	Age	Height (in)	Weight (lb)
Army Aviators	30.25	69.5	165.8
Air Force Series*	27.9	69.1	163.7
Army Series**	24.3	68.5	154.8

* 4,000 officer and enlisted personnel

**25,000 officer and enlisted personnel

The fact that the Army fliers were found to be older, taller, and heavier was not surprising. The other two sample groups included young enlisted men which lowered the averages.

Research in Motion

for evaluation (fig. 8). Prototypes should be ready now, and type classification is scheduled for the fourth quarter of FY 1966.

In addition to converting Army aircraft into airmobile filling stations, this unit may also be used to extend the range of the aircraft. The system includes ultra-lightweight (80 lbs) 500-gallon containers, 2½-inch lightweight hose (approximately one-tenth the weight of standard hose), and lightweight dispensing units. One drive system is an electric driven unit using a high speed lightweight motor and vane type pump which weighs less than 30 lbs. This unit may provide only 300 hours of maintenance-free pumping, but replacement units could be readily available at the base. An alternate approach is a pressure bottle system for quietly dispensing fuel with no need for external power source. This pressure system has the advantage of pushing fuel in high temperatures where conventional pumps encounter vapor problems.

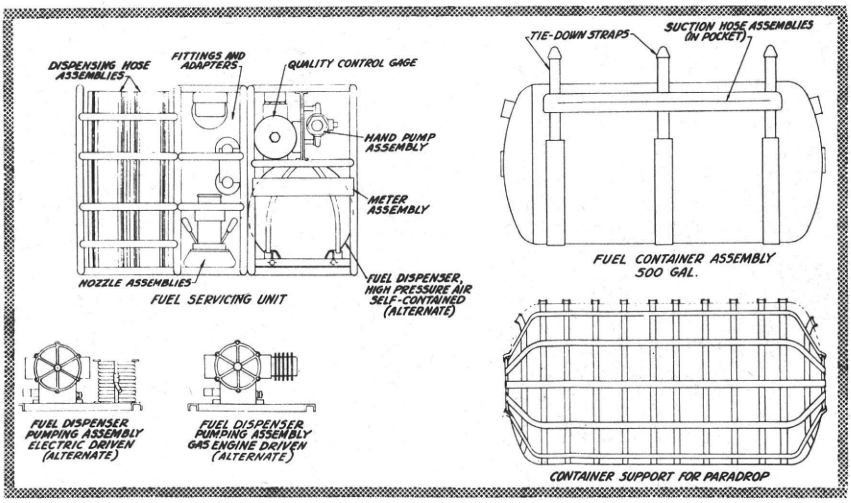

Figure 8. Airmobile refueling system for Army use

FINAL FILTER

New concepts to provide for final filtering of aircraft fuel are being explored. In all new and proposed dispensing units of the airmobile refueling system, plans call for the use of nonvented containers to minimize the introduction of dirt and water. Therefore, if only clean fuel is introduced to this system, gross contamination will not be encountered and a lightweight device such as the fuse-type, go-no-go gauge can be effectively used to act as a final filter, preventing passage of dirt and water.

Go-no-go gauges have been successfully employed with units in Vietnam and with the 11th Air Assault Division. Additional engineering and service tests are now underway. This gauge is a mechanical unit that actually filters out dirt and reacts to water by swelling to preclude passage of both. It is a limited capacity filter/separator that weighs approximately one-tenth as much as conventional standard filter/separators.

The Totamitor is a more sophisticated type of fuel stream monitor which continuously measures the contamination level of fuel being processed. It is being tested for possible use at the fuel system supply point to make sure the filter/separators are working properly.

Only items associated with Army Aviation were discussed in this article. Actually the NLABS' technical program covers almost every conceivable field. Units faced with almost any problem (what to wear, meteorology, geography, pest control, etc.) benefit from research conducted at the labs.

Figure 7. Lightweight air transportable POL container

A tactical "GCA" landing technique used by a unit in support of RVN operations begins with a pilot's cryptic message

". . . out of the valley at :40"

Captain Thomas O. Kuypers

I RECEIVED A letter a couple weeks ago from a fellow aviator stationed in the beautiful city of Hue, Republic of Vietnam. He told me about construction to improve Hue Citadel Airstrip and the implementation of a regular, full-scale flight following service. I knew, nostalgically, that the end of an era in flight operations had been reached in what we referred to as "the big north country" of the Republic.

But to the men who have flown in the area north of Danang and south of the DMZ, one of the treacherous mountain and weather sections of Vietnam, there's a story to be told. Although much deserved attention has been given to the Hueys in the delta area, one Caribou, one Otter, a slickship Huey, and two O-1F Bird Dogs carried the burden of Army Avia-

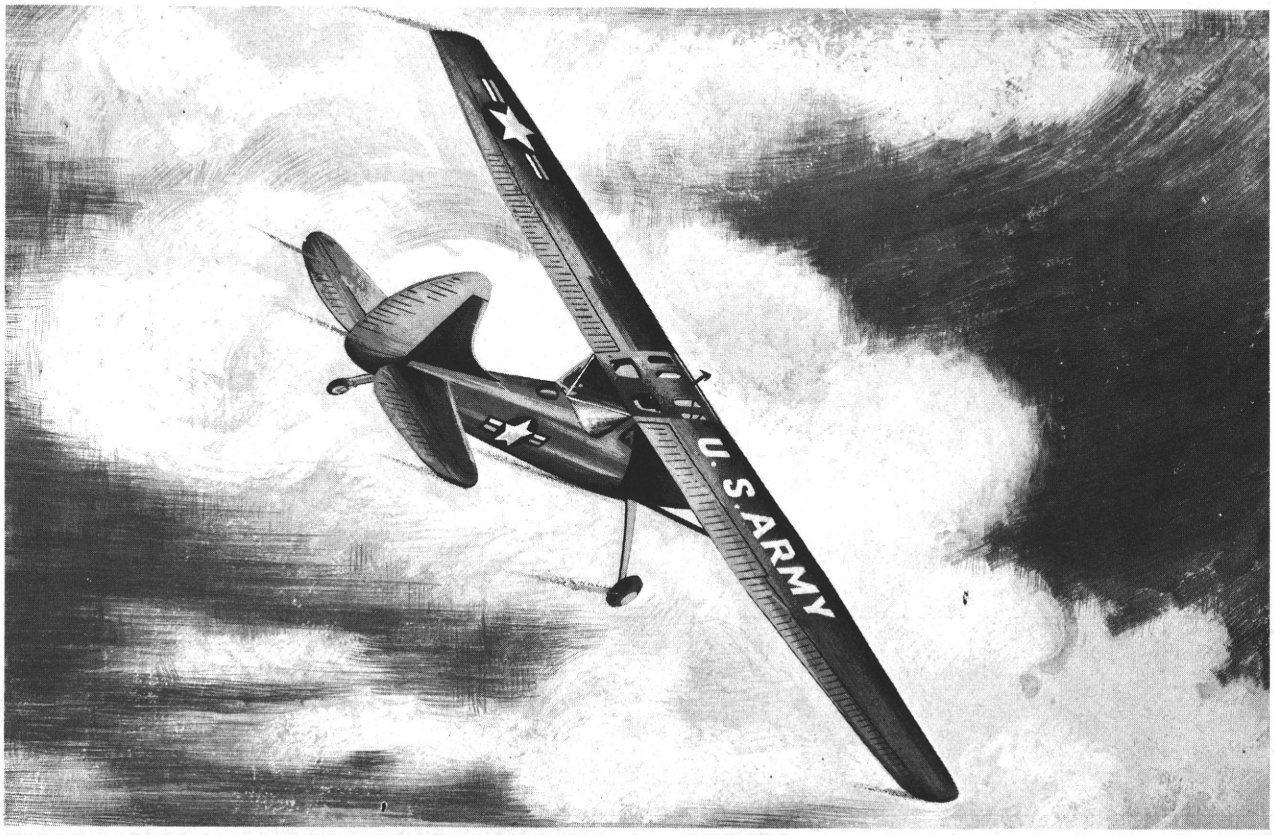

tion support north of Hai Von Pass for the 1st Vietnamese Army Division until recently. The two Bird Dogs, one section of the 73d Aviation Company stationed at Hue, represented the only completely integrated Army Aviation support for 1st Division.

We aviators were proud of that distinction, and were proud to be nicknamed the "mountain men" and the "last remnants of the Lafayette Escadrille." Those little O-1Fs did everything. They air evacuated wounded Vietnamese soldiers; they were used continuously for artillery adjustment with Vietnamese observers; and one enterprising lieutenant even strapped a couple of pigs to the airplane's bomb shackles to deliver emergency foodstuffs to a Special Forces outpost located at Tabat.

Radar coverage stopped north of Hai Von Pass. The tall, rugged range of mountains, which starts at the edge of the South China Sea and continues inland, cuts off Hue from the rest of the country. Navigational aids, with the exception of an erratic nondirectional beacon at Hue Phu Bai Airport which left the air promptly at 1600 every day, stopped north of the pass and north of that pass was concentrated the worst weather (annual rainfall at Hue was 128 inches) and terrain. Yet the two Bird Dogs consistently averaged 80 to 90 hours flight time each per month, even through the monsoons, without modern navaids and without airport facilities.

1,280-foot long airstrip accommodated Otter, C-47s and Caribou for resupply missions

The puppet emperor, Bao Dai, built the airstrip now known as Hue Citadel for his private use. He built it in the center of the old walled city surrounded by a moat whose waters were covered with fragrant water lilies. Into this strip moved the officers and men of the 73d. Once the cattle, chicken, and pigs were herded off the airfield, it was found to be 1,280 feet long with a 520-foot overrun on the northwest end. Marine helicopters from Danang, the Otter and Caribou, and the pilots of Air America's C-47s used the airstrip. In fact, the little field averaged 40 combat support sorties per day.

I'll never forget the air controller, tower operator, and flight following service—a Specialist-4, a VRC-10 FM radio, and a canvas covered ¾-ton truck which served as the flight operations building.

During monsoons the "krachen," a local weather phenomena, would creep into the mountain valleys and along the seacoast, making flight operations difficult at best. The stuff lay down like a blanket for days at a time. We'd hopefully look to the sky each morning for even the slightest indication of lifting. Finally when it lifted to what we thought was at least 500 feet, the word was "go."

Into the planes we'd go, climb up through the "krachen," break out on top, and fly time, distance and heading to the Ashau Valley where most of the operations against the Viet Cong were taking place in the 1st's area. After flying 240° for 20 minutes we'd start looking for holes in the cloud layer, and upon spotting one, get underneath into the valley, proceeding into one of the strips located at Ashau, Tabat, or A'Loui.

Capt Kuypers is assigned to the 1st Aviation Battalion, 1st Infantry Division, Fort Riley, Kan.

The Bird Dog mission included reconnaissance, surveillance, resupply, artillery adjustment

At any one of these strips on any given day, the Bird Dogs would accomplish reconnaissance and surveillance along the Laotian and North Vietnam borders, resupply, aerial escort, and artillery adjustment missions. All day we'd fly up and down the valley, over to the Laotian border, or up to the DMZ. Then along toward sunset the real story of flight operations and flight following would begin.

The last observation mission would usually be completed around 1730. By this time the entire Ashau Valley would be covered by clouds which also obscured the tops of surrounding mountain peaks. The light O-1F would climb out from any one of the three valley strips and head for the center of the valley near Tabat. Here the encircling climbup through the clouds would begin.

Upon reaching 7,000 feet, enough altitude to clear all peaks in the area, a call was transmitted to the radio operator at Hue: "Hue Citadel, this is Backspin 92, out of the valley at :40, taking up 060° heading to Hue. Listen for me." Sometimes "in the soup," sometimes "VFR on top," the aviator would take up the 060° heading to Hue and again fly for approximately 20 minutes.

At Hue, flight operations went into motion. The radio operator carefully noted the time given by the aviator when he started out of the Ashau Valley, and radioed: "Roger, 92, be advised Hue is carrying 500 to 700 overcast; wind northwest, estimated 3 to 5 knots."

As the plane continues its flight, strange things begin to happen at the Hue airstrip. With microphone in hand, the radio operator gets out of his vehicle, looks skyward, and listens. Two other section aviators stop what they're doing, head for the middle of the strip, and listen. The little Vietnamese Air Force mechanic stops his work, runs over to the runway, and listens. The Vietnamese guards look up to the sky, and they too listen.

Quiet prevails at Hue Citadel as all listen for the plane from Ashau Valley. At :57 a distant hum of an aircraft engine is heard. "92, you're getting closer – keep on coming – doing fine – you're veering a bit south, try 050 – sounding good – a bit closer – there – there, you're right over Citadel – 92, you're right over us – bring 'er on down!"

"Roger, Citadel, 92 starting descent."

At 500 fpm and on a heading of 045, the aviator in the Bird Dog begins his descent—down through the "krachen"—down through the soup—out over the coastal plain—*without* navaids.

To those on the ground, this was the longest wait of all. Although each of us had gone through this procedure before, although we all knew this makeshift IFR approach scheme worked, it always seemed like a page out of the past whenever we accomplished it. Each of us kept his eyes on the sky toward the drone of the little plane.

A few minutes later came the welcome call: "Citadel, this is 92, breaking out at 600—have Hue in sight—be landing on 31."

The Specialist-4 put another mark on his board entitled "Number of 'GCA' Approaches." The Vietnamese guards chattered excitedly in the background. The two aviators looked at each other, and the taller one said, "Remind me to set up the Scotch. That was his fifth GCA!"

Frozzleforth stepped from the colonel's office with an armload of publications, including fresh orders appointing him to the position of aviation safety officer

CAPT. HORATIO FROZZLEFORTH, ASO

Pierce Wiggin

COLONEL SHOUTWELL Blout was not noted for long periods of silence. His voice, a mating of buzz saw and jackhammer, could be heard in the far corners of headquarters during an ordinary conversation. When he became slightly irked, it reached across the parade ground, and when he was riled the whole post knew it. For those blessed with some degree of deafness, the state of his temper could be quickly and accurately read through various shades of red in his neck and ears, from low-keyed pink through ripe tomato.

On a morning in late May, headquarters was unusually quiet. Mrs. Blout had fed her husband his favorite breakfast and he arrived in his office in rare good humor. A cup of black coffee steamed on his desk. Colonel Blout tossed his cap onto a table beside the door, crossed the room, and sat down. He lifted the cup, sipped, and began to read the morning mail.

Like a crash of thunder, the roaring voice shattered the silence and rattled the windows, "Jamison!"

Captain Roland Jamison rose vertically from his seat in the administration office. Arms flailing, he autorotated downward, bounced from the chair, recovered, raced through the hall into the colonel's office, skidded to a halt before the desk, and snapped to attention. "S's's'sir?"

"What in the name of all that's holy are they trying to do to me?"

"Beg pardon, sir?"

The colonel shook the papers in his hand and slammed them on the desk. Jamison watched his ears change from deep red to mottled purple.

"Didn't you see these orders assigning Capt Horatio Frozzleforth here?"

"Yes, sir. You know Captain Frozzleforth, sir?"

"Know him? Everybody in the Army knows him! He's clobbered enough aircraft to equip a battalion! He's been thrown out of three Army areas! His last CO had to invent new numbers to fill out his efficiency report! Know him?" Colonel Blout gripped his chair arms. His next words were choked and pleading. "Jamison, what am I going to do with him?"

"Is it too late to get the orders changed, sir?"

"Much too late. These orders were written months ago. They were *conveniently* held up in channels. He's due today!"

"Why not make him aviation safety officer, sir?"

"Make him WHAT? Have you lost your cotton picking mind?"

"He'd be right under your thumb, sir, and he did go through the safety course at USC, even though the dean refused to graduate him. It's in his 201 file. Something about buzzing the campus, driving in restricted areas, and bringing coeds to class. Several instructors resigned while he was there."

"And you'd have me make *him* our aviation safety officer?"

"Like I said, sir, it's the best spot for you to keep him under close control. And who knows? Making him a member of your staff and giving him some

responsibility may be just what he needs. It would look real good if you could get a satisfactory performance from him after so many other commanders have failed."

The colonel nodded slowly. "You might be right, but I'll have to give this some thought. Send in his file and bring him to me as soon as he arrives."

Captain Horatio Frozzleforth, bronzed from 10 weeks in the California sun and resplendent in Class A uniform, stepped from the colonel's office with an armload of publications, including fresh orders appointing him to the position of aviation safety officer. He winked at the WAC stenographer, donned his cap at a rakish angle and strolled out to the red convertible parked before a yellow fire plug.

"Nice of the old boy to lay out the welcome mat so soon. Bit gruff and some of the things he said were a little uncouth, but you can tell right off he recognizes quality. With the world's greatest aviator for ASO, his safety problems are over. Wouldn't surprise me if he started talking promotion after I've put a few of my ideas to work. . . . Wonder why his ears are purple?" Frozzleforth continued musing to himself as he drove away. He flipped on the windshield wipers and kept them going until the pink slip under the left wiper dislodged and drifted away.

After lunch, Frozzleforth changed to fatigues and drove to the airfield. His left arm sported a yellow brassard with black ASO letters. He parked the convertible, stepped out, and walked into the operations shack. The sergeant behind the counter laid a magazine aside and stood.

"Afternoon, Sergeant. I'm Captain Frozzleforth, the new aviation safety officer. Any complaints here?"

"Lieutenant Gordon complained about the trees on the approach end of 36 when he landed at noon. Said he almost burned his brakes out getting stopped."

"Hmmm," Frozzleforth raised his clipboard and jotted a note. "Probably needs brushing up on his shortfield work. I'll see to it. Anything else?"

"The emergency generator for the tower and runway lights is out."

"Have you called the engineers?"

"Yes, sir. They said it would probably be tomorrow before they could get to it."

"I see. It sounds as though I'd better start with an airfield survey. Get me a jeep and driver please."

"Yes, sir." The sergeant walked to an open window behind his desk and leaned out. "Hey, Mac, bring your jeep around front!"

"Oh, Sergeant. I need some night time to make my minimums. See if you can schedule me a U-8 for 1800 hours, will you?"

"Sir, we only have one U-8, and that's reserved for staff flights."

"Quite all right, Sergeant. I'm a member of the staff and I'm sure the colonel will be glad for me to log a few hours in it. You might give Lieutenant Gordon a call and ask if he'd like to go along. I could give him a few pointers on shortfield landings."

"In a U-8, at night, sir?"

"Tut, tut, Sergeant. Nothing to it for a highly experienced IP. You're welcome to go along and see for yourself if you're off duty."

"No thank you, sir!"

Frozzleforth turned away and strode out to the waiting jeep. He muttered to himself, "What's this Army coming to? No spirit of adventure! You'd think he'd jump at the chance to fly with me!"

"Beg pardon, sir?" asked the jeep driver.

"Nothing, driver. Take me around the perimeter. We're going over this airfield with a fine toothed comb! I can see it's time someone shaped things up around here!"

True to his word, Frozzleforth spent the entire afternoon inspecting the ramps, runways, taxiways, overruns, approach obstacles, and sod areas. He filled several pages with terse comments about his observations. "Just wait until I get these typed up

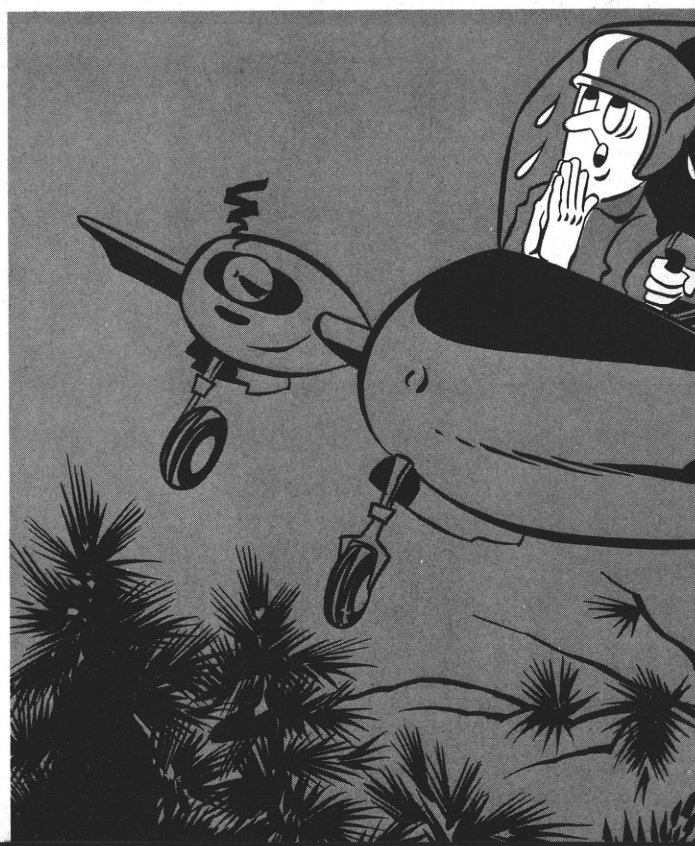

and drop them on the old boy's desk in the morning. He'll soon find he has a real pro on the job!"

Frozzleforth wheeled his car into the operations parking lot promptly at 1800 hours. He stepped out, glanced up at the darkening sky, and paced into the building. "Evening, Sergeant. The U-8 ready for me?"

"It's ready, sir. Do you think we should give the colonel a call, just to make sure he doesn't want to use it?"

"No need to disturb him. We'll be in the local area if he wants it. Is the lieutenant here?"

"Yes, sir." The sergeant nodded toward the young aviator at the counter. "Captain Frozzleforth, Lieutenant Gordon."

"How do, Lieutenant. Suppose you nip out and run through the preflight while I file our clearance."

"Captain, I'm not U-8 qualified."

"Quite all right, Lieutenant. Just get the crewchief to show you around. I'd like to get in the air as soon as possible."

"Yes, sir!"

Frozzleforth watched the young officer hurry out, then turned and started filling out a local clearance form. "What's the weather, Sergeant?"

"Ceiling's 5,000 overcast, sir, visibility 10 miles, wind south at 8 knots. It's going to be a dark night, sir."

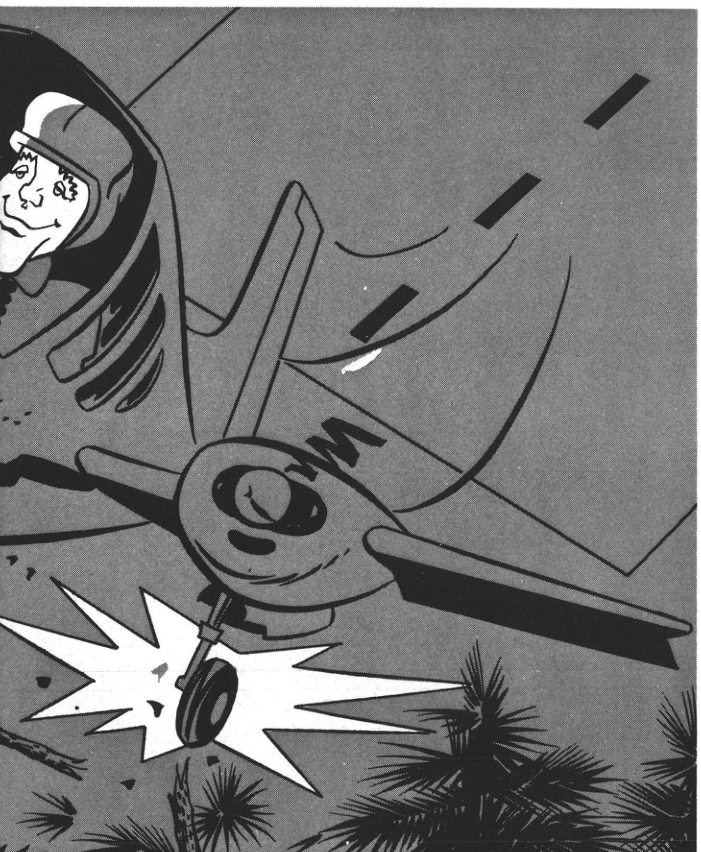

"Good! Nothing like a dark night to test your mettle! I could never understand why so many people prefer to fly in field grade weather. Takes all the sport out of it!"

"Yes, sir. Are you really going to practice short-field landings?"

"Absolutely! Couldn't pick a better time for it."

"Good luck, sir!"

"Not luck, Sergeant. With skill like mine, the luck is taken out of flying!"

Frozzleforth signed the clearance and walked out to where the lieutenant and crewchief waited beside the U-8D. "Preflight all done, Lieutenant?"

"Yes, sir. Wouldn't you like to go over it again?"

"That won't be necessary. I'm sure you and the crewchief covered everything. Let's get aboard!"

The young aviator followed Frozzleforth up the wing and into the cockpit. As they strapped themselves in, he asked, "Would you like for me to read the prestarting check for you?"

Frozzleforth's lips curved in amusement. "When you've flown as long as I have, Lieutenant, you can leave the checklists at home. Just relax and watch the old master at work."

Frozzleforth glanced out the left wing to the crewchief waiting with a fire extinguisher. He shouted, "Clear!" and quickly started the number one engine, adjusted the throttle, and watched the engine instruments come to life. He waited as the crewchief ran around to the other side, then repeated the procedure with the number two engine. As soon as it started, he waved the chocks away, leaned across the cockpit and flipped the radio switches on, set the selector to transmit, waited for the hum in his earphones, and depressed the transmitter button on the wheel. "Flatcake tower, this is Army 79324 on the ramp. Taxi and takeoff instructions, please. Over."

"Army 324, taxi out for runway 18 takeoff. Altimeter 2996. Wind south at 8 knots."

"Roger!" Frozzleforth advanced the throttles and released the brakes. The U-8 lumbered forward.

Quickly, the lieutenant leaned over and shouted, "Aren't you going to turn on your navigation lights, sir?"

Frozzleforth stomped the brakes and saw the crewchief racing past the left wing, waving frantically and pointing to the wingtip.

Looking sternly at the lieutenant, Frozzleforth pointed to the navigation light switch and motioned for him to turn it on. He flipped the radio selector to intercom and said in a cold voice, "That's a copilot duty, Lieutenant! See that you remember next time!"

Confused, the lieutenant nodded his head, "Yes, sir!"

Releasing the brakes, Frozzleforth again advanced the throttles and raced out the taxiway to the end of the runway. He brought the U-8 to a neck-popping halt, ran up both engines, checked the mags and throttled back.

"Flatcake tower, 324 ready for takeoff. Over."

His earphones remained silent. "Damnation! What's the matter with that tower operator? Is he asleep?"

"Sir, we're still on intercom. Would you like for me to change to transmit?"

"Lieutenant, it's lucky you were able to fly with me tonight! I can see you have a lot to learn!"

"Yes, sir." Properly cowed, the lieutenant reached forward and turned the selector to transmit.

"Flatcake tower, 324 ready for takeoff. Over."

"324, you're clear to take the runway. Cleared for takeoff. Flatcake out."

Frozzleforth wheeled sharply out and lined up. He pointed a gloved finger at the radio selector and waited for Lieutenant Gordon to place it on intercom.

"That's better. Now pay close attention. I'm going to demonstrate a maximum performance takeoff. We hold our brakes, advance the power to 48″ and 3400 rpm." He pointed to the tachometers and manifold pressure gauges.

With the aircraft quivering and straining against the brakes, Frozzleforth released the pedals. They shot forward. "Now, it's just a matter of holding it straight until it's ready to fly." He stared ahead as the runway lights flashed by. "At the proper airspeed, we simply lift it off, like this."

Frozzleforth hauled back. The nose came up a few degrees, but they continued to roll. The end of the short runway rushed toward them. It was too late to abort. He stared ahead, then desperately searched the panel. "Power's up—plenty of airspeed—flaps, zero—FLAPS!" His hand shot to the flap switch.

As the flaps lowered, the U-8 came unglued and started to climb. They crossed the end of the runway at 20 feet. There was a sharp crack as the landing gear clipped the top from a pine tree, then they were climbing toward the lights of the post. Frozzleforth raised the gear, brought the throttles and pitch levers back to climb settings, raised the flaps, and trimmed. "You see, Lieutenant, that's where experience pays off! If I hadn't thought about lowering flaps, we could have been in serious trouble!"

Lieutenant Gordon wiped his hand across his face. It came away wet. "Yes, sir!"

———

Colonel Blout, Captain Jamison and their wives were seated around a table on the club patio. As the colonel raised his glass, he heard the sound of engines and his eyes were drawn to the north. "Jamison, isn't that a U-8?"

Jamison nodded. "Sounds like one, sir."

"Do we have any visiting aircraft?"

"Not that I know of, sir."

"Then who in blazes is flying that ship?"

"I don't know, sir. It wasn't scheduled at headquarters. Would you like for me to find out?"

"Yes, and be quick about it!"

"Yes, sir." Jamison rose and hurried into the club.

———

Frozzleforth throttled back, lowered the gear, and retrimmed. "I'll demonstrate the first approach and landing, Lieutenant. Pay close attention and don't hesitate to ask if you have any questions."

"Yes, sir." Lieutenant Gordon fidgeted nervously and stared into the darkness.

"Relax, Lieutenant. Nothing to it, really. It's all a matter of holding the right attitude and controlling the descent with precise power adjustments. I'm sure you'll catch on quickly."

———

When Captain Jamison returned to the table his face was chalky. "S's's'sir?"

"What is it, Jamison? Speak up!"

"It's Captain Frozzleforth, sir. He's flying the aircraft."

"Who gave him permission?"

"No one, sir. He scheduled it himself."

"Is he U-8 qualified?"

"Yes, sir, but, but. . ."

"But what?"

"He has Lieutenant Gordon with him. He's checking him out on shortfield approaches."

———

Frozzleforth turned on final, rolled the wings level, brought the nose up, and pulled the throttles back. He smiled confidently, watching the airspeed drop off. "Watch how I groove this one in. We'll touch down between the first two lights!"

"Sir, there are some pretty high wires across the approach!" Gordon leaned forward and stared down.

"I saw them this afternoon. Have no fear, Lieutenant. We'll clear them by a good 5 feet!"

———

The table went over with a loud clatter and glasses shattered on the flagstone surface as Colonel Blout jumped to his feet. He spluttered as his eyes

bored into the trembling captain. "He's *what*?"

"Yes, sir. According to operations, he. . ."

Lieutenant Gordon stared at the runway lights. The space between them shortened rapidly as the U-8 sank. "C'c'captain, aren't we getting a little low?"

Frozzleforth took off more power and they sank faster. "Lieutenant, I believe you're barrier-shy. We'll have to get you over that. . ."

"Look out, sir! We're below the wires!"

Frozzleforth slammed the throttles forward. There was a blinding flash of light. Electricity crackled and the smell of burnt ozone filled the cockpit. They were thrown violently forward as the aircraft appeared to stop in midair. Then it broke free and dropped into pitch black darkness. The runway lights were out.

The U-8 hit flat and sparks flew again as the propellers dug into the ground at full power. The main gear struts crunched up through the wings. The Seminole slid forward a few feet and stopped. It was dark and silent, except for the sharp pinging sounds of rapidly cooling metal. Frozzleforth pushed the yoke from his stomach. "You all right, Lieutenant?"

"I think so."

"Can't imagine why the engines failed to respond when I applied that dab of power to get us past the wires. This calls for a teardown analysis. I'm sure, with my help, ARADMAC can get to the bottom of it.

"We'd better get out and check the damage. I'll have to get off a crash facts message and the investigation board will undoubtedly want to profit from my experience and advice. You know, it's lucky for us that my superior skill enabled me to keep some measure of control. I'm sure the damage would be much greater if I hadn't. . ."

Frozzleforth was talking to himself. Lieutenant Gordon was well out of range with his face pressed to the ground. His mumbling was incoherent.

Colonel Blout had reached the center of the crowded dance floor when the lights went out. He stopped, swore loudly as someone stepped heavily on his foot, and tried to push his way through the wall of dancers. His hand touched flesh and he felt a sudden stinging slap.

"Who do you think you are? George! Someone is trying to get fresh with me!"

The colonel dropped his hands to his sides, inhaled deeply, and his postwide roar reverberated through the club: "Jamison!!"

UH-1Ds Arrive in Vietnam

THREE NEW airmobile companies (reinforced) of UH-1Ds are now operating in the Republic of Vietnam. This first group of D models will bolster the airmobility support of the RVN army as troop carriers. The D models will respond to mission requests faster, carry a higher payload, and have a greater range than the B's that have performed yeoman service as troop carriers and armed aerial escort vehicles.

From the MAG-26 SAFETY RAISER

The Accident and Cause Factors

Captain D. V. Wood

THIS STORY concerns a workman in the Barbados. He wrote the following to his boss: "When I arrived on the job, I noticed that several bricks had been knocked off the top of the building by the hurricane. I went to the top of the building and rigged a beam with a pulley. I then filled a bucket with loose bricks in order to clear away the debris. I went to the bottom of the building and pulled on the line, which freed the bucket from the top. At this point, I realized that the bucket was heavier than I, and I started to travel up at a tremendous rate of speed. I met the bucket halfway, striking my shoulder, hips and shins. I proceeded to the top, jammed my finger in the pulley and struck my head against the beam.

"When the bucket hit the ground, it burst its bottom, and spilled the bricks. I was then heavier than the bucket, so I started down, meeting the bucket halfway, and further injured my shins and shoulder. I landed on several sharp bricks, cutting myself. I lost all presence of mind and let go the rope. The bucket came down and struck me on the head. I respectfully request sick leave."

As a recent graduate of the USC Building Safety Officers course and being the BSO for the Barbados area, I was assigned to investigate and report on this accident. I checked through all available records, surveyed the accident scene, talked to witnesses and the men involved and took scads of photos.

These are my findings:

Weather was obviously a factor; no hurricane, no bricks, no accident.

Weight and balance was out of limits.

Error in judgment by the workman in accepting an overloaded bucket that was beyond weight limitations.

The boss should have provided better training and should have given the workman a standardization check for the type equipment in use.

Pulley design was poor.

Bucket was below required standards and so burst as it hit the ground.

The workman was not wearing the approved safety helmet at the time of impact.

When the Building Safety Center at Norfolk received my report they were really burned up. Sweeping directives came forth and inspections were held in an effort to correct these errors before another, possibly more serious, accident occurred.

The unit in the Barbados really shaped up. They have logged 40,000 accident free hoists and have won the safety award for the past two years.

On a more serious vein, accidents, particularly aviation accidents, seldom have a single, well defined cause. More often they are the result of a sequence of small omissions, the failure of one or more persons to do their individual jobs to the best of their ability.

An airplane starts out as nothing more than a mass of material. It knows nothing of how it will be shaped, what stress it will be exposed to, how it will be maintained, or who will pilot it. It leaves these functions to be taken care of by human beings.

Unfortunately, human beings are capable of making mistakes. These mistakes can be eliminated or minimized to an acceptable level. This is accomplished only through training and experience. When we were infants, we found tying a shoestring an impossible task. We now perform this task with ease and a certainty that we will not err.

Maintaining and piloting an airplane is never a simple job. We cannot commit to memory the complex procedures used in the field of aviation. We must train, we must learn, we must use guides that are based on experience. The mech who knows more than the tech inspector, the pilot who has better procedures than NATOPS are examples of people who are willing to disregard the experience of others. They will eventually be recorded as accident factors.

A supervisor is a person who has an experience level and has shown good judgment. Both of these qualities allow him to lead or assist others. He has an obligation to those he leads.

Experience is a collection of knowledge. None of us will live long enough to experience every possible situation in aviation. We may live longer if we use the experiences of others.

Let's use our training and experience, do our best as a supervisor, listen to others, and use established guides. Let's find and eliminate the potential accident cause factors. We don't want folks "bustin" their buckets here in MAG-26.

TILT

... HOW TO MAKE SLOPE LANDINGS AND TAKEOFFS IN SINGLE ROTOR HELICOPTERS

Barney Roth

Mr. Roth is an air safety specialist with the Prevention and Investigation Division, USABAAR.

HELICOPTERS and pinball machines have much in common. Both are highly audible and both require manual dexterity on the part of their operators. Both give great satisfaction when handled correctly, and both are subject to a condition called *tilt*. Here, the similarity ends. Pinball machines can be cured with a nickel or dime. Helicopters require many thousands of dollars to repair the results of a miscalculation. For this reason, we conclude our discussion of pinball machines and go on to. . .

SLOPES

You might think the procedure for making slope landings and takeoffs in single rotor helicopters is basic and known to all helicopter pilots. But is it? What happens when the correct procedure is not used? Figure 1 shows an example—a multithousand dollar example—of what happened to one embarrassed pilot. You can avoid this experience through understanding the *hows* and *whys* of. . .

LANDINGS

Slope landings are made by applying a slight downward pressure on collective pitch to start the aircraft descending slowly. When the upslope skid touches the ground, cyclic control pressure is applied toward the upslope skid. This will hold the aircraft against the slope while it is let down with collective pitch. As pitch is reduced, increased upslope cyclic is applied to maintain position on the slope. If you reach the limit of upslope cyclic before the downslope skid touches the ground, the landing should be aborted and another site selected. *The*

Figure 1. Multithousand dollar example

Figure 2. Upslope skid off the ground first — trouble!

slope must be shallow enough to allow you to hold the aircraft with cyclic during the entire landing. When the downslope skid is on the ground, you can continue to lower collective pitch to the bottom.

TAKEOFFS

Almost the reverse procedure is used for slope takeoffs. After desired rpm is attained, the cyclic stick is moved toward the upslope skid. Collective pitch is then smoothly applied. When the aircraft becomes light on the skids, the necessary pedal is applied to maintain heading. The collective is the first control to give response and the first to warn of impending trouble. If the aircraft does not become evenly light, you should be aware that it is not getting off the ground. *You must ensure that the downslope skid rises first.* If the upslope skid comes off first, you can rapidly get into serious trouble. Once the downslope skid has risen and the aircraft approaches a level attitude, continued collective is applied to pick straight up to a hover.

It must be remembered that helicopters have a limited amount of lateral cyclic control available. We'll talk about the UH-1B, but this principle applies to all single rotor helicopters. The UH-1B has

Figure 3. Downslope skid off the ground first — aircraft under control

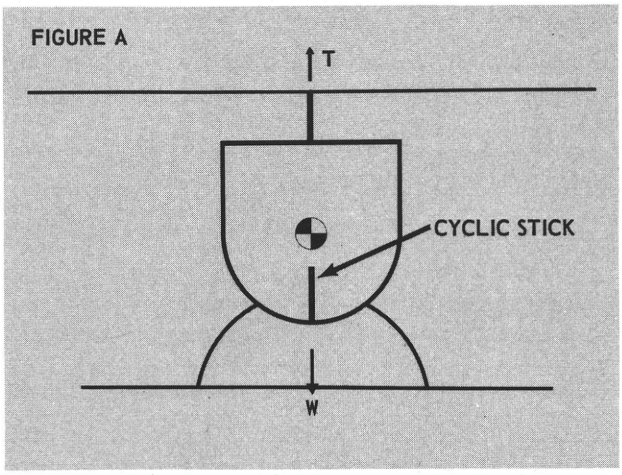

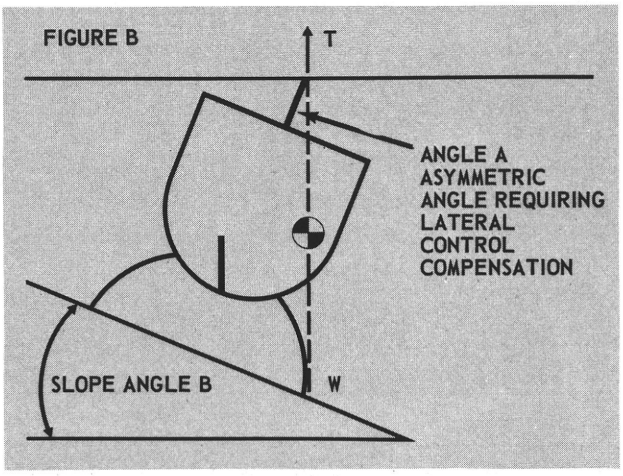

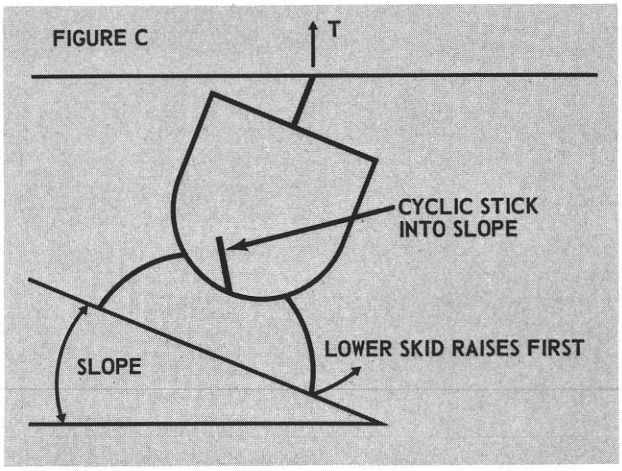

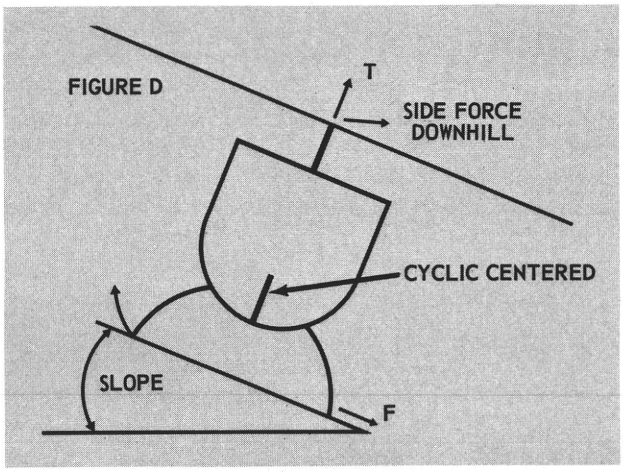

about 10° of left and right lateral cyclic available.

Figure A shows the aircraft level with the center of gravity in its proper place. In this condition, the thrust and weight vectors are opposite and perpendicular to the ground.

Figure B shows the helicopter on a slope. There is a marked shift in c.g. toward the downslope side. This shift is caused by a shift in fuel and by loading the aircraft on the downslope side. The more fuel load and the more downslope loading, the greater this shift will be. Weight and thrust vectors are still through the c.g., *but there is now an angle between the rotor mast and the thrust-weight vectors.* This angle (a) reduces the amount of upslope cyclic available by the number of degrees in the angle. Angle *a* and angle *b* (slope angle) must be overcome with lateral cyclic. If these angles exceed the lateral cyclic available, we're in trouble.

The condition shown in figure B can also exist to some degree on level ground if the aircraft load is not evenly distributed. In this condition, lateral cyclic opposite the heavier side is used for takeoff.

Uneven loading can be used to advantage in slope work. By loading the aircraft on the upslope side when possible, angle *a* shown in figure B can be reduced, thus increasing the effective lateral upslope cyclic available.

Figure C shows the aircraft on a slope with the cyclic upslope. In this condition the thrust vector is parallel to the horizon and will cause the downslope skid to rise first.

Extreme caution must be used in loading passengers on the upslope side with the rotor turning, as the slope angle decreases ground-rotor clearance.

Figure D illustrates what happens if a slope takeoff is attempted with the cyclic centered. Note that the thrust vector is no longer parallel to the horizon but is toward the downslope. If collective is applied with the cyclic in this position, one of two unhealthy situations can quickly develop:

• If the aircraft is on a nonadhesive surface, it will have a tendency to slide down the slope. If a

rock, root, or other object is hit while sliding, or if it slides onto an adhesive surface, the upslope skid will rise first and the helicopter is likely to roll over.

• If the aircraft is on an adhesive surface, the upslope skid will most likely rise first and create a rolling movement about the downslope skid.

If you find yourself in either of these situations, lower the collective immediately to stop the slide and place the up skid back on the ground. This requires alertness and fast action. With the helicopter stopped and both skids firmly on the ground, analyze your thrust vector and determine what you did wrong.

There is one other solution when the upslope skid rises first: expedite the takeoff. This requires a clear area and excellent technique. Using this method *may* expedite the takeoff — *or it may expedite the rollover.*

A UH-1B on a 5° slope has approximately 5° of upslope lateral control available. For each inch the upslope skid rises, .58° of upslope lateral cyclic is lost. If the upslope skid rises 9 inches, 10.2° of lateral cyclic would be needed to make the rotor plane parallel to the horizon. It doesn't take much imagination to see what the result would be if you attempted a takeoff in this situation.

Figure 2 shows a takeoff attempt where the upslope skid has risen first. The pilot will compound his trouble unless he takes immediate action. Figure 3 shows the downslope skid rising first. The aircraft is moving toward level attitude and the pilot has it well under control.

An understanding of what is going on in your rotor disc and good slope technique can get you down and up with little sweat. Anything else is apt to leave you wondering what caused the TILT!

Never Strike Twice In the Same Place

They say that lightning never strikes the same spot twice, *but C-124 propwash does!*

O-1E blown over by C-124 propwash while taxiing, September 1963

Same airfield, January 1965 — O-1E blown over by propwash from C-124 while taxiing

A new one on us!

A Pilot Worth His Salt

A CHECK PILOT riding with a flight crew aboard an overseas airline jet transport recently reported the following:

"ETA Rome was about 00.04; weather was good except for a strong and quickly veering wind. Approaching Rome, wind had been 240/25, gusting to 36; and when we landed it was 280/30, gusting to 40. Visibility was more than 20 km (over 12 miles).

"The flight was cleared to FIU locator, descending to 1,800 feet, thereafter to pass over the field and join lefthand circuit for runway 25.

"As we were in the holding pattern while descending, I had ample opportunity to verify the weather as reported. We passed over the locator at 2,300 feet, and followed ILS localizer, descending to 1,000 feet, then climbed back to 1,500, passing over the field at that altitude. While over the field, I saw the captain rub his hand along the inside of the window as if he were trying to clean it. Toward the end of the downwind leg, he complained of poor visibility. As I was occupying the observer's seat, I looked through the side window and found visibility good but much less through the front windows, and realized this was unusual.

"As the aircraft turned on final, visibility through the front windows was reducing even further. I switched on windshield heat to full, and the captain turned on rain removal, but nothing helped. Visibility became so bad I warned the captain he might have to make an overshoot.

"From the observer's window I was able to assess the approach path very well because the side windows allowed good visibility. An excellent approach and landing was made under the prevailing circumstances, but even while taxiing visibility continued to drop. After clearing the runway it was impossible to see enough through the three front windows to taxi.

"After parking, we investigated and found a layer of salt powder had built up outside the windows and was firmly stuck to the glass.

"Upon considering the whole occurrence, we must have met a salt layer at an altitude of less than 2,300 feet and been in it for a flying time of not more than 9 minutes before landing. The salt was identified by taste. It must have been marine salt lifted to such heights off a very rough sea by the strong winds.

"The tower, incidentally, was completely unaware of the situation."

—Flight Safety Foundation, Inc.

We invite comments on the above flight experience.

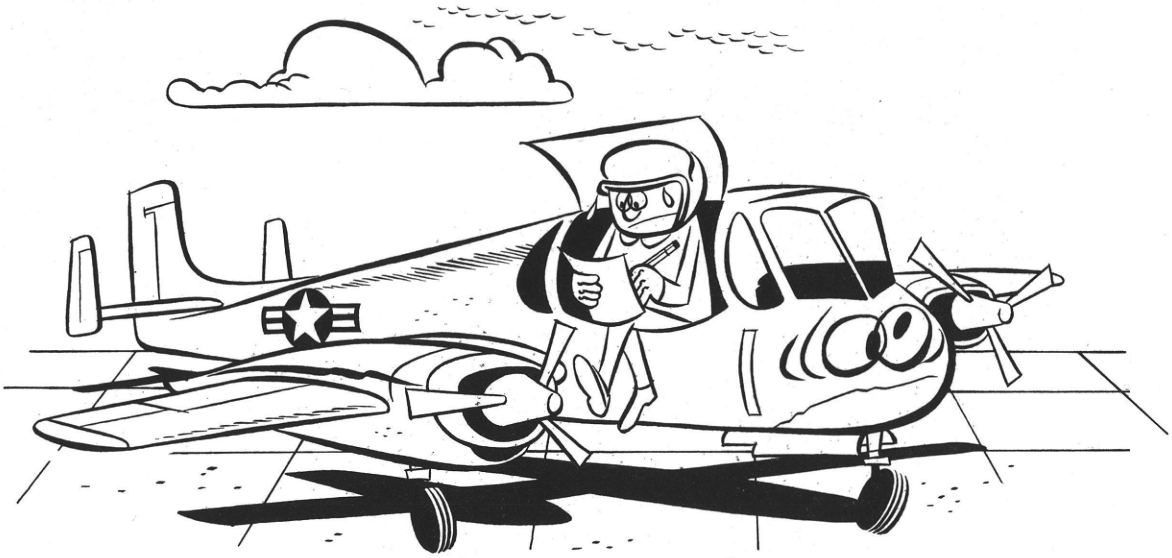

SHARE ITS

excerpts from near–accident and flight hazard reports

U-6 "I was sandwiched between two other aircraft for landing during a period of heavy traffic. About five aircraft were on final, with airspeeds varying 80-120 knots. I was instructed to close up on the CV-2 ahead of me to be able to clear the runway quickly. A good crosswind from the right was blowing and I held the right side of the runway, figuring this would put me in clear air. I was about 300 feet behind the CV-2 at approximately 50 feet, airspeed 70 knots, when I was caught in its backwash. My left wing dropped. I applied full right aileron and rudder, but continued in a steep left turn. At 45° to the runway heading, I relaxed my control pressures and added power, allowing the aircraft to fly itself out of the turbulence. I flew away from the runway at a 90° angle.

"Lesson: Don't assume that just because an aircraft flies slowly like the CV-2 it will create little backwash, propwash, or wingtip vortices. Give everything plenty of clearance, no matter what requirements a controller places on you. Take it around and wait to be fitted into traffic with safety spacing."

Pilot

OH-13 "Several aviators have reported an inflight hazard caused by carrying field equipment and passengers wearing field equipment in OH-13 aircraft. Steel helmets and gas masks carried in the lower forward portion of the bubble slide sideways and interfere with antitorque pedal travel. Passengers' and pilots' canteens and pistols interfere with operation of collective pitch.

"Recommend external pods be designed to carry field equipment."

U-6A "While reporting over the VOR at 4,000 feet during a missed approach, two foreign jets, believed to be F-100s, passed within 100 feet of our aircraft. I reported a near-miss to approach control and they advised they had no reported jet traffic in

the area. The weather was clear. Visibility was approximately 2 miles in haze."

Instructor Pilot

OH-13 "While contour flying at 70 knots in an area covered with 3-4 feet of snow, I noticed the right skid was dragging in the snow. I called it to the pilot's attention and he immediately pulled up and went back to examine the area we had flown through. We found the right skid had been dragging through the snow for approximately 300 yards. The pilot said he thought he was flying 10-12 feet above the snow. I feel that the loss of visual reference due to the completely white environment resulted in a loss of depth perception and a dangerous situation."

Passenger

OV-1 "I was on an IFR flight plan, proceeding west on a Victor airway, when we met a CV-2 approaching head-on. I took evasive action, but the CV-2 pilots gave no indication they had seen us. We passed near enough for me to read the tail number and recognize the organizational insignia of the CV-2."

Pilot

U-1A "I was climbing out at approximately 500 feet after a night takeoff from runway 29 when I saw an aircraft converging head-on for an apparent approach to runway 11. I banked sharply right, and missed the other aircraft by 400-500 feet at the same altitude. It continued a low approach to runway 11, then climbed out to the northeast."

Pilot

UH-1B "We were approaching a nondirectional beacon, inbound on a practice ADF approach. Approximately one-half mile from the beacon, at 800 feet, we were bracketed by two jets. One passed directly under us at approximately 600 feet and the other passed over us at about 1,000 feet. We called the airfield and were informed that no jets had reported, although they were well within the control zone."

Pilot

U-8D "The right main tire blew out at touchdown. I kept it [the U-8D] straight for 50 yards when it became difficult to hold the runway heading. To prevent damage to the wheel and brakes, I taxied into some sand that bordered the runway and came to a stop in about 15 feet. I found an area about 2 inches in diameter that was showing cord on the tire. The rest of the tire was too thin for safety."

Pilot

O-1A "I was making a GCA to an Army airfield in marginal weather, on final at 500 feet, when two jet fighters passed approximately 100 feet in front of me at the same altitude."

Pilot

U-6A "I had taken off and was climbing through 1,200 feet when another U-6A passed approximately 30 feet off my right wingtip, slightly above. The other aircraft had not contacted the airfield tower. I watched it for the next 15 minutes as it descended and flew low over the city."

Pilot

UH-1D "I was flying at 2,500 feet MSL at night en route to an RP location. Our navigation lights were on STEADY-DIM, as prescribed, with the rotating beacon off. Before we had time to react, an OV-1 passed under us from a 90° angle, right to left, at a distance of 10-15 feet. The copilot, crewchief, and I agreed on the separation. The OV-1's engines were very loud."

Pilot

OH-13S "I was firing the M-2 machinegun kit from a hover of approximately 6-8 feet. The wind was 10-15 knots at five o'clock to the nose of the aircraft. The left door blew open in front of the gun and one round hit the lower door frame."

Pilot

U-8D "We were at the yellow line, waiting for an IFR departure clearance when the tower instructed us to taxi into position and hold. We cleared ourselves and saw a Piper Cub on long final. I called the tower and advised them about the Cub. The tower replied: 'Roger, you're clear to taxi into position and hold.' I called the tower again and told them the Cub was on short final and we would hold our position. The tower operator said: 'Roger, you're cleared for immediate takeoff.' The pilot then called the tower and asked if they saw the Cub on rollout. The reply was: 'Roger. Hold your position.' "

Copilot

U-6A "We were on an IFR clearance at an assigned altitude of 4,000 feet. We were in and out of the clouds. I heard approach control talking to a civilian aircraft at 4,500 feet over our next VOR. The civilian aircraft was told to remain VFR and maintain 4,500 feet until given an IFR clearance for an approach. As we reached the VOR, I saw the civilian aircraft at my altitude and headed toward me on a collision course. I dived to avoid hitting it, and we missed by about 100 feet."

Instructor Pilot

U-6A "I was flying on an IFR flight plan at my assigned altitude of 6,000 feet on a Victor airway, heading south. I saw an aircraft at the same altitude. Unable to tell whether the aircraft was heading in the same direction, I watched it approximately 20 seconds. At that time I was able to tell it was heading in the opposite direction. Visibility was at least 15 miles in all directions. Approximately 10 seconds later, I made a sharp bank and turned 90° toward the west, barely missing a Convair airliner which was heading north. The airliner made no attempt to change its course and we passed it at approximately 200 feet after I made the evasive maneuver."

Instructor Pilot

CH-34 "I was flying as observer for a hooded flight in a CH-34. We were proceeding south on a Victor airway at 2,500 feet and I had just contacted the tower for clearance through the area en route to a nearby Army airfield. I saw a commercial four-engine aircraft on a collision course from the south. I took control and executed an autorotative right turn. The airliner made a right turn toward the airport and appeared to add power. Without this action, I feel a collision would have been certain."

Copilot

OH-13H "Flying at 500 feet, I had seen an F-104 below on a parallel course approximately 5 miles to my left. I had just commented to my passenger that high performance aircraft often flew very low through the area when I looked out to the right front and saw three jet aircraft flying on a collision course with me. They were in a tight right echelon and I immediately went into autorotation. I am convinced the jet pilots did not see me until I made the sudden drop. As I entered autorotation, the two lead aircraft passed to the right and slightly above me. The third jet made a steep bank, right wing high, and began climbing across my front and slightly above. I flew through moderate turbulence created by the jet. As the three aircraft passed, they began to climb and disappeared in the clouds."

Pilot

CV-2B "Twenty miles from the impact area at Fort ———, we reported to military operations and were cleared into the restricted area. Military operations reported all ranges closed until 1200 hours local. At 0708 hours, we were approximately 2 miles south of a tactical strip and saw two gray-white puffs of smoke. Before we could turn, two additional rounds exploded approximately 1,000 meters from the aircraft. We again contacted military operations and asked about the range status. This time operations reported the restricted area was in use from 0700 hours until 1200 hours local. The bursts we saw were ground bursts and appeared to be 105 rounds."

Pilot

GOBBLEDYGOOK

"Engine overboost at power settings above 2500 rpm of more than 2 inches (Hg) above the maximum allowable manifold pressure for any period of time, or less than 2 inches (Hg) above the maximum allowable manifold pressure for more than 15 seconds. Engine overboost at power setting between 2201 to 2500 rpm of more than 6 inches (Hg) above the maximum allowable manifold pressure for any period of time, or less than 6 inches (Hg) above the maximum allowable manifold pressure for any period of time, or less than 6 inches (Hg) above the maximum allowable manifold pressure for more than 15 seconds."

The above was taken from a recent change to an organizational maintenance manual. Any mechanic who can accurately decipher this passage should immediately apply for a master's degree in verbiage.

Army Aviators claim or hold 33 world rotary wing records

New Heights

THE U. S. ARMY is claiming three world altitude helicopter flight records. Recently ten other Army flight records were officially certified by the Federation Aeronautique Internationale (FAI).

Altitude records are being claimed for the CH-54A Flying Crane which soared to new heights in three flights at Sikorsky Aircraft's flight field at Stratford, Conn. The ten certified records were set in the UH-1D last September at Edwards AFB (see below and DIGEST, Jan 1965).

Following spectacular flights that peaked out at 5½ miles above the earth, the Flying Crane is claiming two records currently held by the Soviet Union and one by the U. S. Air Force. Loads for the 5,000 and 2,000 kilogram flights were carried on a flat pallet while the 1,000 kilogram load was in a light passenger van.

The FAI box score on helicopter world flight records claimed or certified now stands at 40 for the U. S., with the Army accounting for 33 of these; 15 for the USSR; 9 for France; and 1 for Czechoslovakia.

WORLD HELICOPTER FLIGHT RECORDS

HELD OR CLAIMED BY U. S. ARMY

EVENT - DATE	AIRCRAFT	PILOT	RECORD
CLASS E-1 (Open Class, any weight)			
Distance in a straight line — 9/27/64	Bell UH-1D	Capt M. N. Antoniou	1,348.81 mi from Edwards AFB to Rogers, Ark.
Distance in closed circuit — 9/18/64	Bell UH-1D	Maj John A. Johnston	1,615.742 mi
Speed in a 2,000 kilometer (1,242.8 mi) closed circuit — 9/23/64	Bell UH-1D	CWO Joseph C. Watts	133.984 mph
Time to climb to 3,000 meters (9,843 ft) — 10/7/64	Bell UH-1D	CWO Emery E. Nelson	2 min, 9.65 sec
Time to climb to 6,000 meters (19,686 ft) — 10/7/64	Bell UH-1D	CWO Emery E. Nelson	4 min, 35.75 sec
Time to climb to 9,000 meters (29,529 ft) — 10/7/64	Bell UH-1D	Capt W. H. Welter, Jr.	9 min, 13.7 sec
***Altitude** with payload of 5,000 kilograms (11,025 lbs) — 4/23/65	Sikorsky CH-54A	Maj T. J. Clark, Jr., & CWO Ulysses V. Brown	21,250 ft
***Altitude** with payload of 2,000 kilograms (4,410 lbs) — 4/23/65	Sikorsky CH-54A	Maj T. J. Clark, Jr., & CWO Ulysses V. Brown	27,550 ft
***Altitude** with payload of 1,000 kilograms (2,205 lbs) — 4/23/65	Sikorsky CH-54A	Maj T. J. Clark, Jr., & CWO Ulysses V. Brown	29,300 ft
CLASS E-1.b (Light Helicopters, 1,102 - 2,204 lbs)			
Speed over a 3 kilometer (1.86 mi) course — 10/29/63	Hiller OH-23G	Maj Bertram G. Leach	123.69 mph
Speed over a 15/25 kilometer (9-15 mi) course — 10/29/63	Hiller OH-23G	Maj Bertram G. Leach	123.58 mph
Speed in 100 kilometer (62.14 mi) closed circuit — 10/30/63	Hiller OH-23G	Maj Bertram G. Leach	121.70 mph
Class E-1.c (Light Helicopters, 2,204 - 3,858 lbs)			
Speed over a 3 kilometer (1.86 mi) course — 10/29/63	Hiller OH-23G	Maj Bertram G. Leach	123.45 mph
Speed over a 15/25 kilometer (9-15 mi) course — 10/29/63	Hiller OH-23G	Maj Bertram G. Leach	123.76 mph
Speed in 100 kilometer (62.14 mi) closed circuit — 10/30/63	Hiller OH-23G	Maj Bertram G. Leach	119.74 mph
CLASS E-1.d (Light Helicopters, 3,858 - 6,614 lbs)			
***Altitude** without payload — 12/11/64	Bell UH-1D	Maj E. F. Sampson	35,150 ft
Speed over a 3 kilometer (1.86 mi) course — 7/22/60	Bell HU-1	CWO Clifford Turvey	**158.037 mph**
***Speed** over a 3 kilometer (1.86 mi) course — 11/25/64	Bell UH-1D	Capt J. F. Comer	180.14 mph
***Speed** over a 15/25 kilometer (9-15 mi) course— 11/20/64	Bell UH-1D	Capt Donald P. Wray	171.65 mph
***Speed** in 100 kilometer (62.14 mi) closed circuit — 11/21/64	Bell UH-1D	Maj John K. Foster	168.98 mph
Speed in 500 kilometer (310.69 mi) closed circuit — 7/23/60	Bell HU-1	Col Jack L. Marinelli	**148.499 mph**
***Speed** in 500 kilometer (310.69 mi) closed circuit — 11/23/64	Bell UH-1D	Maj Billy L. Odneal	176.8 mph
Speed in 1,000 kilometer (621.4 mi) closed circuit — 4/20/62	Bell YHU-1	Maj William F. Gurley	134.93 mph

CLASS E-1.e
(Light Helicopters, 6,614 - 9,920 lbs)

Distance in a straight line — 9/27/64	Bell UH-1D	Capt M. N. Antoniou	1,348.81 mi from Edwards AFB to Rogers, Ark.
Distance in a closed circuit — 9/23/64	Bell UH-1D	CWO Joseph C. Watts	1,242.83 mi
***Altitude** without payload — 12/14/64	Bell UH-1D	Lt Col R. J. Kennedy	25,418 ft
***Speed** over a 3 kilometer (1.86 mi) course — 11/16/64	Bell UH-1D	Capt Donald P. Wray	173.193 mph
***Speed** over a 15/25 kilometer (9-15 mi) course — 11/20/64	Bell UH-1D	Maj Leonard R. Dennis	172.91 mph
***Speed** in 100 kilometer (62.14 mi) closed circuit — 11/20/64	Bell UH-1D	Maj John K. Foster	164.12 mph
***Speed** in 500 kilometer (310.69 mi) closed circuit — 11/23/64	Bell UH-1D	Capt Robert A. Chubboy	170.75 mph
Speed in 1,000 kilometer (621.4 mi) closed circuit— 9/15/64	Bell UH-1D	Maj John A. Johnston	146.086 mph
***Speed** in 1,000 kilometer (621.4 mi) closed circuit — 11/24/64	Bell UH-1D	Maj E. F. Sampson	164.07 mph
Speed in 2,000 kilometer (1,242.8 mi) closed circuit — 9/23/64	Bell UH-1D	CWO Joseph C. Watts	133.984 mph

* Indicates Claim Awaiting FAI Approval

WELL DONE

Lieutenant Herbert M. Coalson, 229th Assault Helicopter Battalion, 11th Air Assault Division, Fort Benning, Ga., was IP in a UH-1B at approximately 1930 hours, 15 April 1965. The pilot flying under the hood had completed a practice VOR approach to Muscogee County Airport and started a missed approach with a clearance to the locator outer marker. After the climb was established, Lieutenant Coalson took control to allow the pilot to study his approach plate and tune the radios. As they reached 2,200 feet, Lieutenant Coalson returned the controls to the pilot.

Seconds later, a noise was heard from the engine compartment and the aircraft yawed violently to the left. Coalson immediately took control and entered autorotation. By applying outstanding technique, he was able to clear powerlines and trees and land in the only available space, the ball field of the Phenix City Boys Club. There was no damage to the aircraft or the property, and there were no injuries. Engine failure was caused by failure of the fuel control.

Congratulations to Lieutenant Coalson for a fine job of flying.

Digest Writing Awards Contest Winners

ANNUAL WINNERS

1st Prize . . . $125.00	2nd Prize . . . $75.00	3rd Prize . . . $50.00
Capt Chadwick C. Payne	Capt Thaman N. Corley	Maj Francis P. McDermott

The fifth U. S. ARMY AVIATION DIGEST Annual Writing Awards Contest begins with this issue. Again all civilian and military personnel are encouraged to submit entries.

The primary purpose of the contest is to foster a broader exchange of knowledge on all aspects of the Army Aviation Program and to inspire those within our program to develop their communicative skills.

Articles accepted for publication during the previous contest periods and as yet unpublished are automatically entered in the new contest. For those who have not submitted entries, this is a fine chance to increase your value to the Army and the Army Aviation Program by improving your writing abilities. A professional military man of today must be able to express himself clearly and concisely in writing as well as in speech. By writing an article for the DIGEST you enhance your overall professional ability.

All manuscripts should be mailed to: Editor-in-Chief, U. S. ARMY AVIATION DIGEST, U. S. Army Aviation School, Fort Rucker, Ala., 36362.

* * *

Appropriate pictures, diagrams, charts, etc, to illustrate articles should be backed with protective cardboard for enclosure with the manuscript. Photographs preferably should be 8 x 10 black and white glossy prints. Illustrations will be returned if requested. While good illustrations improve manuscript presentation and are desired, articles will not be judged on the artwork or photos submitted.

MONTHLY WINNERS

Lost Communications Procedures	Maj Francis P. McDermott	Jul 64
Effective Unit Capability	Capt Ulysses S. Large, Jr.	Aug 64
Pilot Ignorance	Capt Thaman N. Corley	Sep 64
Mission	Capt Chadwick C. Payne	Oct 64
C.O.D. – Cargo on Demand	Capt Thomas H. Harvey	Nov 64
Vietnam Orientation	CWO Donald H. Bishop, Jr.	Jan 65
Survival for Aviators	Lt Robert C. Knight	Feb 65
You Bet Your Life!	Capt Hubert F. McKenney, Jr.	Mar 65
Project Flattop	A. E. D'Angelo	Apr 65
UH-1 "Collective Bounce"	Capt Edgar A. Westlake	May 65
Demands of the Aviation Career	Lt Col William R. Mathews	Jun 65